DPP-MS300E

SERVICE MANUAL

AEP Model
UK Model

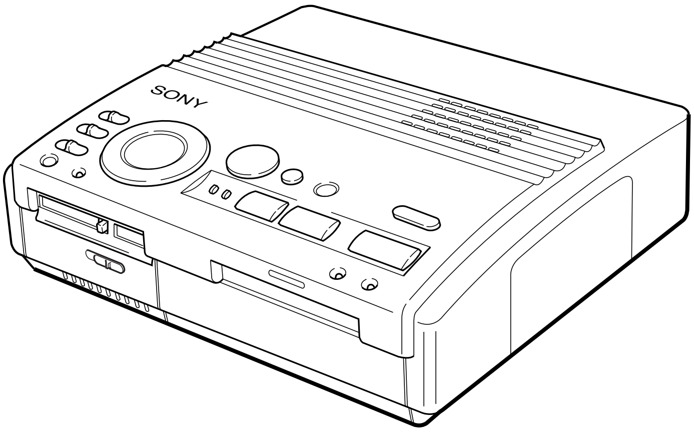

SPECIFICATIONS

Printing system
Sublimation dye transfer printing (Yellow/Magenta/Cyan 3 pass)

Effective pixels
1,376 (H) x 1,024 (V) dot

Printing size
114 (H) x 85 (V) mm (maximum) (4 1/2 x 3 3/8 inches)

Gradations
256 levels (8 bits), per color (24 bits)
Approx. 16,770,000 colors

Printing time
Approx. 100 seconds per sheet (excluding the time for data processing and data transferring from the video equipment or "Memory Stick" or PC card)

Input/output connectors
VIDEO INPUT connector
(phono jack x 1)
1 Vp-p, 75 ohms (unbalanced), sync negative
S VIDEO INPUT connector
(4-pin mini-DIN x 1)
Y: 1 Vp-p, 75 ohms (unbalanced), sync negative
C: 0.286 Vp-p (color burst), 75 ohms (unbalanced)
VIDEO OUTPUT connector
(phono jack x 1)
1 Vp-p, 75 ohms (unbalanced), sync negative
Parallel Interface (Centronics, Anfenole full 36-pin x 1)
"Memory Stick" insertion slot (1)/ PC card insertion slot (1)

Writing size into the "Memory Stick" or PC card (When writing video pictures)
640 (H) x 480 (V) (JPEG)

Compatible image file formats
JPEG
• 4:4:4, 4:4:2, 4:2:0 (baseline JPEG)
• File size of 1Mbyte or smaller
BMP
• 24 bit full color
• Windows format
• File size of 1Mbyte or smaller
(Note that some versions of the file formats may not be compatible.)

Maximum number of files to be handled
256 files

Print cartridge / Print paper
100 × 140 mm (4 x 5 5/8 inches)
Print pack : VPM-P50STA
VPM-P50WSA
VPM-P50S02B
VPM-P50S16A
VPM-P50LAB

Power requirements
220 - 240 V AC, 50/60 Hz

Power consumption
72W (printing)
13 W (standby mode)

Operating temperature
5 °C to 35 °C (41 °F to 95 °F)

– Continued on next page –

DIGITAL PHOTO PRINTER

SONY®

9-928-127-31

Dimensions
Approx. 301 × 83 × 246 mm (w/h/d, excluding protruding parts)
(12 × 3 3/8 × 9 7/8 inches)

Mass
Approx. 3 kg (6 lb 10 oz)

Supplied accessories
AC power cord (1)
Video connection cable (1)
CD-ROM (for Microsoft Windows® 95/98) (1)
Instruction Manual (1)
User's guide for the Sony Digital Photo Printer Utility for MS300E (1)
Warranty (1)

Design and specifications are subject to change without notice.

- Microsoft, MS, MS-DOS and Windows® are registered trademarks of Microsoft Corporation in the United States and other countries.
- IBM PC/AT is a registered trademarks of IBM Corporation of the U.S.A.

CAUTION

Danger of explosion if battery is incorrectly replaced.
Replace only with the same or equivalent type recommended by the manufacturer.
Discard used batteries according to the manufacturer's instructions.

ADVARSEL!

Lithiumbatteri-Eksplosionsfare ved fejlagtig håndtering.
Udskiftning må kun ske med batteri
af samme fabrikat og type.
Levér det brugte batteri tilbage til leverandøren.

ADVARSEL

Eksplosjonsfare ved feilaktig skifte av batteri.
Benytt samme batteritype eller en tilsvarende type
anbefalt av apparatfabrikanten.
Brukte batterier kasseres i henhold til fabrikantens
instruksjoner.

VARNING

Explosionsfara vid felaktigt batteribyte.
Använd samma batterityp eller en likvärdig typ som rekommenderas av apparattillverkaren.
Kassera använt batteri enligt gällande föreskrifter.

VAROITUS

Paristo voi räjähtää, jos se on virheellisesti asennettu.
Vaihda paristo ainoastaan laitevalmistajan suosittelemaan tyyppiin.
Hävitä käytetty paristo valmistajan ohjeiden mukaisesti.

Flexible Circuit Board Repairing

- Keep the temperature of the soldering iron around 270 ˚C during repairing.
- Do not touch the soldering iron on the same conductor of the circuit board (within 3 times).
- Be careful not to apply force on the conductor when soldering or unsoldering.

Notes on chip component replacement

- Never reuse a disconnected chip component.
- Notice that the minus side of a tantalum capacitor may be damaged by heat.

SAFETY-RELATED COMPONENT WARNING!!

COMPONENTS IDENTIFIED BY MARK ⚠ OR DOTTED LINE WITH MARK ⚠ ON THE SCHEMATIC DIAGRAMS AND IN THE PARTS LIST ARE CRITICAL TO SAFE OPERATION. REPLACE THESE COMPONENTS WITH SONY PARTS WHOSE PART NUMBERS APPEAR AS SHOWN IN THIS MANUAL OR IN SUPPLEMENTS PUBLISHED BY SONY.

TABLE OF CONTENTS

1. GENERAL

Identifying the parts 1-1
Setting Up 1-1
Printing 1-4
Making Various Prints... 1-6
About "Memory Stick" 1-10
About PC Cards 1-10

2. DISASSEMBLY 2-1

3. MECHANICAL ADJUSTMENTS 3-1

4. ELECTRICAL ADJUSTMENTS 4-1

Power Supply Block 4-3
Video Block 4-4

5. DIAGRAMS

5-1. Block Diagram – VIDEO Section – 5-1
5-2. Block Diagram – MAIN Section – 5-3
5-3. Block Diagram – CENTRONICS Section – 5-5
5-4. Block Diagram
– PC CARD/MEMORY STICK Section – 5-7
5-5. Block Diagram
– HEAD/SENSOR/MOTOR/
POWER SUPPLY Section – 5-9
5-6. Frame Schematic Diagram 5-11
5-7. Notes for Printed Wiring Board and
Schematic Diagram 5-13
5-8. Printed Wiring Board – VS-40 Board – 5-15
5-9. Schematic Diagram – VS-40 Board – 5-16
5-10. Printed Wiring Board – VI-40 Board – 5-17
5-11. Schematic Diagram – VI-40 Board – 5-19
5-12. Printed Wiring Board – DK-40 Board –.................... 5-23
5-13. Schematic Diagram – DK-40 Board (1/3) – 5-25
5-14. Schematic Diagram – DK-40 Board (2/3) – 5-28
5-15. Schematic Diagram – DK-40 Board (3/3) – 5-31
5-16. Printed Wiring Board – MP-40 Board –.................... 5-33
5-17. Schematic Diagram – MP-40 Board – 5-35
5-18. Printed Wiring Boards – FE-40/JK-40 Boards – 5-39
5-19. Schematic Diagram – FE-40/JK-40 Boards – 5-41
5-20. Printed Wiring Board – SW-40 Board –.................... 5-43
5-21. Schematic Diagram – SW-40 Board – 5-45
5-22. Printed Wiring Boards
– HP-40/JD-40/MD-40/RD-40 Boards – 5-47
5-23. Schematic Diagram
– HP-40/JD-40/MD-40/RD-40 Boards – 5-49
5-24. IC Pin Function Description 5-59

6. EXPLODED VIEWS 6-1

7. ELECTRICAL PARTS LIST 7-1

SECTION 1
GENERAL

This section is extracted from instruction manual (3-866-753-11).

Identifying the parts

See the pages given in parentheses for use of the parts.

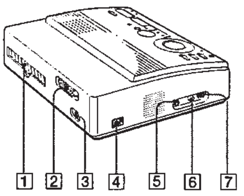

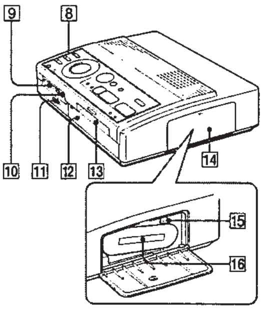

Cartridge compartment

1 Paper outlet (page 52)
2 Parallel port (page 11)
3 AC power connector (page 11)
4 POWER switch (page 12)
5 VIDEO OUTPUT connector (page 8, 9, 10)
6 VIDEO INPUT connector (page 10)
7 S VIDEO INPUT connector (page 10)
8 Operation panel (page 7)
9 PC card insertion slot (page 9)
10 "Memory Stick" insertion slot (page 8)
11 "Memory Stick"/PC card selection switch (page 8, 9)
12 Cover for the optional automatic feeder (page 18)
13 Paper inlet/outlet for manual feeding (page 17, 52)
14 Cartridge compartment lid (page 15)
15 Eject lever (page 16)
16 Print cartridge (pages 14, 15) (not supplied)

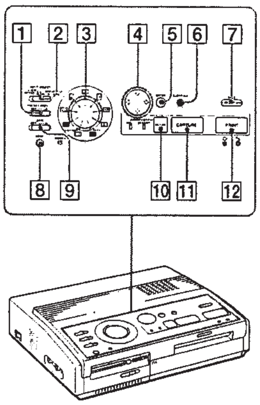

Operation Panel

1 PRESET PRINT switch (page 35)
2 INPUT SELECT switch (pages 19, 23)
3 Print mode dial (pages 20, 24, 27, 31, 33)
4 Arrow buttons (←/→/↑/↓) (page 20)
5 ENTER button (pages 13, 21)
6 CLEAR ALL button (page 24)
7 SAVE button (page 39)
8 MENU button (pages 12, 36, 40)
9 DATE switch (page 26)
10 PICTURE button (pages 21, 24)
11 CAPTURE button (pages 21, 24)
12 PRINT button (pages 21, 25)

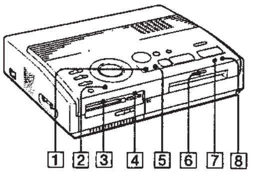

Indicators

1 INPUT indicator (pages 21, 24, 50)
2 POWER indicator (pages 12, 50)
3 PC card access indicator (page 20)
4 "Memory Stick" access indicator (page 20)
5 MEMORY indicator (pages 21, 24, 50)
6 Printing indicator (pages 21, 25, 50)
7 Paper supply indicator (pages 17, 21, 25, 50)
8 Cartridge error indicator (pages 16, 50)

Connecting the printer

Notes
- You cannot insert both the "Memory Stick" and PC card at the same time.
- Before making connections, turn off the power of both the printer and television.

Inserting a "Memory Stick" or PC card

When printing images recorded on a "Memory Stick" or PC card, insert either the "Memory Stick" or PC card into its insertion slot on the printer. Also connect the printer to the television to display the images to be printed. For using a "Memory Stick," see page 44, and for using a PC card, see page 46.

Inserting a "Memory Stick"

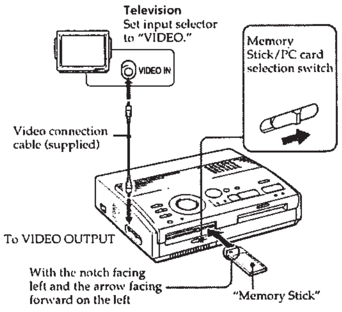

1 Slide the "Memory Stick"/PC card selection switch to the right so that the "Memory Stick" insertion slot opens.

2 With the notch facing left and the arrow facing forward on the left, insert the "Memory Stick" into the "Memory Stick" insertion slot until it clicks into place.

Ejecting the "Memory Stick"

Push the "Memory Stick" further into the insertion slot and let it pop out. After it pops out, remove it slowly.

Notes
- If the "Memory Stick" does not fit into the slot properly, confirm the position of the "Memory Stick"/PC card selection switch and the direction of the notch and arrow on the "Memory Stick." Then re-insert it into the slot.
- Do not attempt to force the "Memory Stick" into or out of the slot. Otherwise, the "Memory Stick" or the printer may be damaged.

Tip
By using a commercially available PC card adaptor, you can also use Smart Media or other types of compact flash cards (page 46).

Notes
- If the PC card does not fit into the slot properly, confirm the position of the "Memory Stick"/PC card selection switch and the direction of the arrow on the PC card. Then re-insert it into the slot.
- Do not attempt to force the PC card into or out of the slot. Otherwise, the PC card or the printer may be damaged.

Inserting a PC card

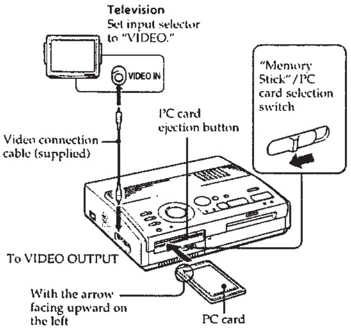

1 Slide the "Memory Stick"/PC card selection switch to the left so that the PC card insertion slot opens.

2 With the arrow facing upward on the left, insert the PC card into the PC card insertion slot until it clicks into place.

Ejecting the PC card

Press the PC card ejection button. After the PC card pops out, remove it slowly.

Connecting to video equipment

When printing images from video equipment such as a digital still camera or video camera, use the supplied video connection cable to connect the video equipment and the printer. Also connect the printer to the television to display the images to be printed.

For printing operations, see page 24.

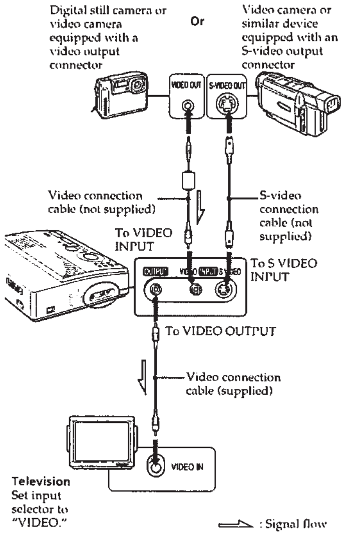

If the video equipment has an S-video output connector
Connect it to the S VIDEO INPUT connector of the printer using the optional S-video connection cable so that you can get better picture quality. In this case, you do not need to connect the video connector.

When both the S VIDEO INPUT and VIDEO INPUT connectors of the printer are connected
The input signals from the S VIDEO INPUT connector are automatically selected.

Notes
- Before making connections, turn off the power of the printer, the video equipment and television.
- Also refer to the instruction manual of the video equipment.

Notes
- Before making connections or plugging in a cable, turn off the power of the printer, your PC, and the monitor.
- Also refer to the instruction manual of your PC.
- Use a shielded printer cable which is shorter than 6 feet 6 inches (2 m).
- You may not be able to use the printer and the printer driver on a network or a commercially available printer buffer.

If your computer does not match the D-sub 25-pin plug
Use a commercially available cable having an Anfenole full 36-pin plug for the printer, and a plug that is compatible with your computer.

Connecting to a computer

When printing images from an IBM PC/AT compatible computer, connect the printer's parallel port to the computer, connect the printer port of your personal computer (PC) and install the supplied Sony Digital Photo Printer Utility for MS300/MS300E. You can transfer the images from a "Memory Stick" or PC card into your PC hard disk and make a variety of prints.

For how to install and operate the software including printing from your PC, refer to the supplied User's Guide.

Use a commercially available connection cable with a D-sub 25-pin plug (male) for your computer and an Anfenole full 36-pin plug for the printer:

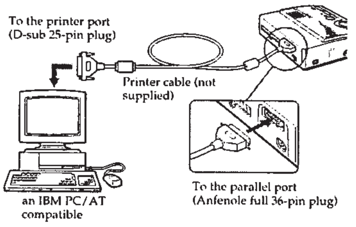

Connecting the AC power cord

After you make the connections, connect the supplied AC power cord to the AC power connector of the printer and then to the AC outlet.

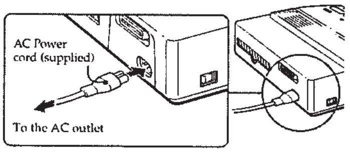

Adjusting the clock

By adjusting the clock of the printer, you can record the time when the images were captured from your video equipment. You can also automatically start the calendar with the current month when making a calendar print.

Once you adjust the clock, the clock is maintained with the battery even if you turn off the power.

1 Turn on the power of the printer.
The POWER indicator lights up.

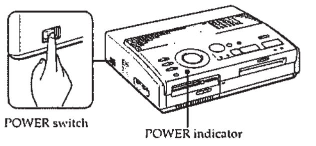

2 Press MENU.
The menu appears on your television.

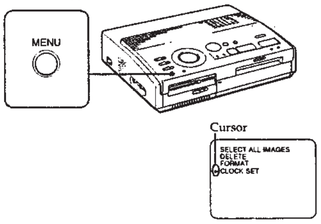

Television screen

Note
The following CLOCK SET example shows the screen for the DPP-MS300.

Cancelling the menu operations
Press MENU. The menu display disappears without saving the settings. The printer returns to standby mode.

Confirming the clock setting
Follow the steps 1 through 3. The current clock setting appears on the screen.
To return to the previous screen, press MENU.

3 If the cursor (▶) does not appear on "CLOCK SET," press ♦/♦ to move the cursor to "CLOCK SET" and press ENTER.
The "CLOCK SET" display turns yellow and the clock setting display appears.

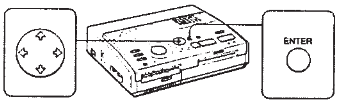

4 Press ➡.
The cursor appears on the day.

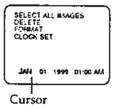

5 Press ♦/♦ to set the day.
Pressing ♦ increases the item.
Pressing ♦ decreases the item.

6 Press ➡.
The cursor moves to the next item.

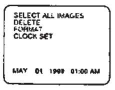

7 Repeat steps 4 and 5 to set all of the items: day, month, year, hour and minute.
If you want to set the previous item, press ⬅.

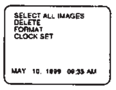

8 Press ENTER.
The clock setting display disappears.

9 Press MENU.
The menu disappears and the printer returns to standby mode.

Using print packs (not supplied)

Notes
- Use the set of print paper and print cartridge supplied together in the same carton. If you use them in a different combination, proper printing results may not be obtained, or a paper jam or other trouble may occur.
- If there are fingerprints or dusts on the printing surface of the Super Coat print paper, the printing quality may deteriorate.
  For good printing quality, we suggest you use the automatic feeder VPF-A3.

About the number of prints
Each print cartridge allows you to print only the same number of prints as the number of print paper supplied in the print pack. If you print with paper that has already been printed once or with left over paper, the cartridge may run out prematurely.

You need an optional print pack designed for the printer. The pack contains print paper and a print cartridge for printing.

Select the print pack from the following according to the type of printing you will do:

VPM-P50STA
- Designed for 50 standard prints.
- Contains one print cartridge for printing 50 sheets and two sets of 25 sheets of standard print paper.

VPM-P50WSA
- Designed for 50 prints of full-screen stickers.
- Contains one print cartridge for printing 50 sheets and two sets of 25 sheets of adhesive-labels.

VPM-P50S02B
- Designed for 50 prints of 2-split stickers.
- Contains one print cartridge for printing 50 sheets and two sets of 25 sheets of 2-cut adhesive-labels.

VPM-P50S16A
- Designed for 50 prints of 16-split stickers.
- Contains one print cartridge for printing 50 sheets and two sets of 25 sheets of 16-cut adhesive-labels.

VPM-P50LAB
- Designed for 50 Super Coat prints.
- Contains one print cartridge for printing 50 sheets and two sets of 25 sheets of Super Coat print paper.

Loading the print cartridge

Caution
Never put your hand into the cartridge compartment. The thermal head reaches high temperatures, especially after repeated printing.

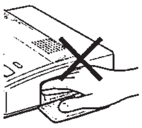

Notes
- If the print cartridge is not loaded when you turn on the printer, the warning sound beeps and the cartridge error indicator lights up.
- When installing the print cartridge, stand it on end as illustrated so that dust will not get on the ink ribbon.

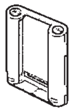

- Do not touch the ink ribbon or place the print cartridge in a dusty location. Fingerprints or dust on the ink ribbon may result in imperfect printing.

Insert the print cartridge into the printer.

Use only the print cartridge supplied with the print paper packed in the same carton.

1 Press PUSH to open the cartridge compartment lid.

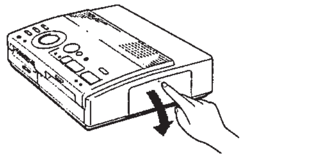

2 Insert the print cartridge firmly until it clicks into place and close the cartridge compartment lid.

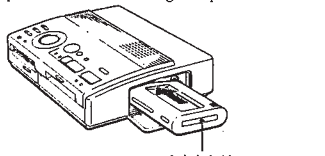

Labeled side

If the print cartridge does not click into place
Remove the print cartridge, and then re-insert it. Only when the ink ribbon is too slack to be loaded, wind the ink ribbon to remove the slack.

Labeled side

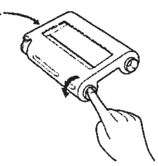

While pressing the center of the reel, wind the ink ribbon in the direction of the arrow.

continued

Loading the print cartridge (continued)

If ink ribbon should tear
Repair the ribbon with transparent tape. There should be no problem with using the remaining portion of the ribbon. Before loading the print cartridge into the printer, turn the reel until the transparent tape can no longer be seen.

Repair with transparent tape.

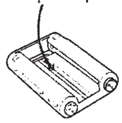

Notes on storing the print cartridge
- Avoid placing the cartridge in a location subject to:
  - high temperatures
  - high humidity
  - excessive dust
  - direct sunlight
- When you are going to store a partially-used cartridge for an extended period of time, store it in its original bag.

To eject the print cartridge
Open the cartridge compartment lid and push up the eject lever. Then remove the print cartridge.

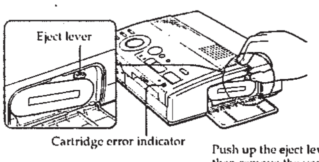

Push up the eject lever, then remove the used print cartridge.

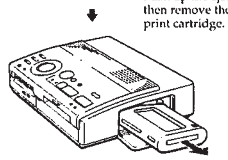

To replace the print cartridge
If you try to print when the ink ribbon of the print cartridge runs out, the print paper is automatically loaded and then ejected and the cartridge error indicator flashes.

Remove the print paper. Then open the cartridge compartment lid and replace the used print cartridge with the new one.

The ejected print paper can be used again.

Inserting the print paper

Notes
- Insert the print paper straight along the guide to the left of the paper inlet. If the paper is positioned to the right or slanted, the printing area may be out of position.
- The paper may not be loaded automatically if you do not insert the paper firmly.
- You cannot type on the printing surface before printing. If you want to write greetings or draw on the printing surface after printing, use an oil ink pen.
- Do not attach a sticker or something on the printing surface before printing.
- When handling the print paper, do not touch the printing surface (shiny side where nothing is printed). Also, do not place print paper in a dusty location. Fingerprints or dust on the printing surface may result in imperfect printing.
- Do not print on sticker paper which has already been peeled off.
- Use the print paper recommended for this printer only.
- Do not fold or bend the print paper.

Insert the print paper sheet by sheet. **Use the print paper designated for this printer only.**

1 Turn on the power of the printer.
The POWER indicator lights up.

2 Follow printing procedures.
After pressing PRINT, the paper supply indicator flashes. For details, see pages 19 to 35.

3 Insert the print paper straight with its blank printing surface facing up **and along the guide to the left of the paper inlet.**
Insert the paper until less than 2 cm (approx. 0.8 inches) remains. The paper is automatically loaded when printing starts.

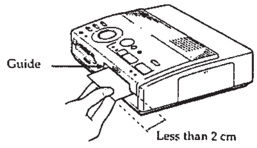

continued

Inserting the print paper (continued)

Notes on storing the print paper

- Avoid placing the print paper in a location subject to:
  - high temperatures
  - high humidity
  - excessive dust
  - direct sunlight
- When you are going to store partially-used print paper for an extended period of time, store it in its original bag.

When you use the optional automatic feeder VPF-A3

You can automatically print up to 25 sheets.

To attach the automatic feeder, press PUSH on the automatic feeder insertion port cover on the front panel of the printer.

When you close the cover, press PUSH until it locks.

For details, refer to the operating instructions for the automatic feeder VPF-A3.

Printing an image from a "Memory Stick" or PC card

Notes

- Avoid getting liquids on the "Memory Stick" or PC card or using them in areas subject to high humidity. Otherwise, data may be rendered unreadable.
- The printer can handle and display up to 256 image files. If there are more than 256 images stored in the "Memory Stick" or PC card, use the supplied Sony Printer Utility for MS300E to display and handle the remaining images.

You can select an image recorded on the "Memory Stick" or PC card and print it in full-size (**standard print**).

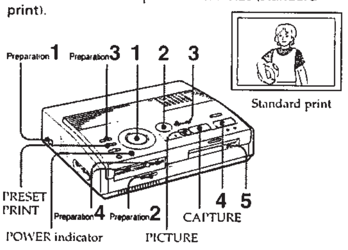

Preparations

Note
Make sure PRESET PRINT is set to "OFF."

1 Turn on the printer and television and set the input selector of the television to "VIDEO."
The POWER indicator lights up.

2 Set the "Memory Stick"/PC card selection switch so that the desired insertion slot opens.

3 Set INPUT SELECT to "MEMORY STICK/PC CARD."

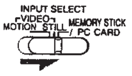

continued

Printing an image from a "Memory Stick" or PC card (continued)

Notes

- When the access indicator is lit, do not eject the "Memory Stick" or PC card. Otherwise, they may crash.
- An image which is damaged or has some kind of trouble does not appear in the image list. "FILE ERROR" appears on the display.
- If there are no images stored in the "Memory Stick" or PC card, "NO FILE" appears on the display.
- Depending on the type of digital still camera or video camera, it may take some time for the thumbnail list to be displayed.

Scrolling the pages
When multiple pages exist, you can scroll through the pages. To display the next page (when ⯆ appears at the bottom-right), move the white frame to the bottom line of the image list and press ⯆. To display to the previous page (when ⯅ appears at the top-right), move the white frame to the top line and press ⯅. The access indicator flashes and the page changes.

4 Insert a "Memory Stick" or PC card on which you recorded images into the "Memory Stick" or PC card insertion slot. (page 8)
While the printer is accessing the "Memory Stick" or PC card, the access indicator flashes. When the printer finishes reading images, recorded images are displayed as thumbnails.

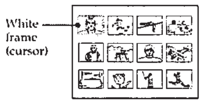

Printing

1 Set print mode dial to "[ ] (standard)."

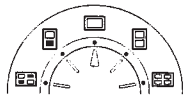

2 Press the arrow (⯇/⯈/⯅/⯆) buttons to move the white frame (cursor) to the image you want to print.
Move the white frame up (⯅), down (⯆), right (⯈), or left (⯇).

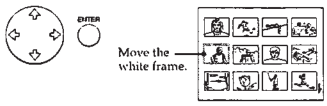

Cancelling the selection
Move the white frame to the image you want to cancel and press ENTER. The blue frame disappears and the selection is canceled.

Selecting multiple images
Repeat steps 2 and 3 until you select all images you want to print.

Notes

- The displayed full-size image may not correspond with the details of the actual print.
- Depending on the size of an image, it may take 5 to 60 seconds to display a full-size image on the monitor.
- If you press PRINT while displaying the actual print image, only the displayed image is printed.
- If you press PRINT while displaying the thumbnail list, all images with the blue frame are printed.
- While printing, never move or turn off the printer; the print cartridge or paper may become stuck. If this happens, turn the printer off and on, and resume printing from the beginning.
- Do not insert another sheet of print paper until you remove the printed sheet.
- While printing, the print paper is partially ejected from the paper outlet several times. Never pull out the paper forcibly.

3 Press ENTER.
The blue frame appears inside the white frame and the selected image is specified to be printed.

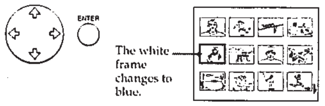

Displaying the actual print image in full-size
Move the white frame to the desired image, then press CAPTURE in step 3. The MEMORY indicator lights. The selected full-size image appears in the center of the screen. To display the next or previous full-size image, press ⯆ (next image) or ⯅ (previous image). If you want to re-select the image, press PICTURE. The INPUT indicator lights and the thumbnail list appears again. Repeat steps 2 and 3.

4 Press PRINT.
The printing indicator and the paper supply indicator flashes. Insert the print paper (page 17). The print paper is automatically loaded and printing starts.

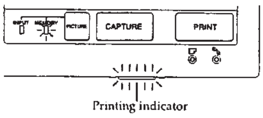

continued

Printing an image from a "Memory Stick" or PC card (continued)

Notes
- Avoid storing the paper with the printed faces touching each other or in contact with rubber or plastic products including vinyl chloride or plasticizer for an extended period of time; the ink may transfer on to them.
- Depending on the type of digital still camera or video camera, the aspect ratio of a recorded image differs, so the image may not be printed in the entire printable area.
- Depending on the type of digital still camera or video camera, preview images may be displayed along with the primary images in the thumbnail list. The printed quality of the preview images will not be as good as the primary images. Note that if you delete the preview images (page 40), the data for the primary images may be damaged.
- Depending on the type of digital still camera or video camera, an image may be stretched vertically if it has been rotated or processed with your digital still camera or video camera. This is not because of trouble with the printer, but because the image was rewritten with your digital still camera or video camera.

Printing direction
The image displayed on your television is printed in the direction as shown below.

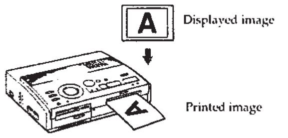

5 When printing ends, a beep sounds and the print paper automatically emerges from the print outlet. Remove the print from the printer.
After you remove the print paper, the printing indicator turns off.

Printing the same image again
Press PRINT.
With the optional automatic feeder VPF-A3, you can print the same image continuously up to 25 times on separate sheets.

Printing other images
Press PICTURE so that the thumbnail screen appears, then perform steps 1 through 5.

Printing multiple images continuously
You can print multiple images continuously for up to 25 sheets using the optional automatic feeder VPF-A3.

Printing all of the images
You can use the menu to select all of the images on your "Memory Stick" or PC Card. See page 36.

Printing an image from video equipment

Notes
- To print a quickly-moving image without blur, select "VIDEO MOTION" for blur compensation*.
- To print a still or slightly-moving image in good picture quality, select "VIDEO STILL" for no blur compensation. Blur compensation for such an image may deteriorate printing resolution.
- It is not recommended that you select an image while pausing the video equipment because the picture quality will deteriorate. Select the image while playing them back.
- Set INPUT SELECT before pressing CAPTURE.

*** Blur compensation**
When you set INPUT SELECT to "VIDEO MOTION," the selected image appears on the screen and a horizontal red line moves from the top to the bottom on the left half of screen, then moves from the top to the bottom on the right half of screen. During this sequence, if there is motion blur on the image, the printer automatically compensates for the image (blur compensation).
When the blur compensation ends, the screen becomes dark once and the print image appears on the screen.

You can capture the input image from the video equipment connected to the VIDEO INPUT connector of the printer and print it in full-size (**standard print**).

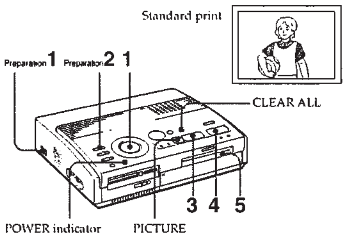

Preparations

1 Turn on the printer and television and set the input selector of your television to "VIDEO."
The POWER indicator turns on.

2 Set INPUT SELECT to "VIDEO MOTION" or "VIDEO STILL."

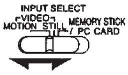

To print	Selector position
rapid-motion pictures input from video camera or deck	VIDEO MOTION
still or slightly-moving pictures input from video camera or deck	VIDEO STILL
still pictures input from digital still camera or video camera	VIDEO STILL

continued

Printing an image from video equipment (continued)

Note
When the print mode dial is set to "▦ (index)," you cannot store an image on the memory by pressing CAPTURE.

Printing

1 Set the print mode dial to "□ (standard)."

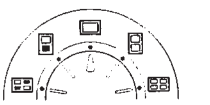

2 Start playback on the video equipment.
While the INPUT indicator lights up, the playback picture appears on the screen (**input picture**).
For details on playing back on your video equipment, refer to the instruction manual of your equipment.

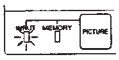

Input image

3 Press CAPTURE when the picture you want to print appears on the screen.
The selected full-size image appears in the center of the screen, and the MEMORY indicator lights up.

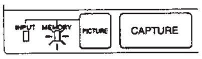

Print image

When you select "VIDEO MOTION"
When you set INPUT SELECT to "VIDEO MOTION," the selected image is blur-compensated in step 3.

Re-selecting the image
Press PICTURE. The playback picture appears on the screen.
If you press CLEAR ALL, the printer is reset to standby mode.
Perform printing procedures from the beginning.

Notes
- While printing, never move or turn off the printer; the print cartridge or paper may become stuck. If this happens, turn the printer off and on, and resume printing from the beginning.
- Do not insert another sheet of print paper until you remove the printed sheet.
- While printing, the print paper is partially ejected from the paper outlet several times. Never pull out the paper forcibly.
- Avoid storing the paper with the printed faces touching each other or in contact with rubber or plastic products including vinyl chloride or plasticizer for an extended period of time; the ink may transfer on to them.

4 Press PRINT.
The printing indicator and the paper supply indicator flashes. Insert the print paper (page 17). The print paper is automatically loaded and printing starts.

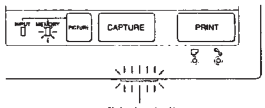

Printing indicator

Printing direction
The image displayed your television is printed in the direction as shown below.

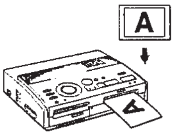

5 When printing ends, a beep sounds and the print paper automatically emerges from the print outlet. Remove the print from the printer.
After you remove the print paper, the printing indicator turns off.

Printing the same image again
Make sure that the desired image is displayed on the screen, then press PRINT.
With the optional automatic feeder VPF-A3, you can print the same image continuously up to 25 times on separate sheets.

Printing the date

Note
You can print the date only when the image's date data is recorded in the DCF (Design rule for Camera File system) format.

When printing an image in the "Memory Stick" or PC card, you can print the date recorded together with the still image shot with your digital still camera or video camera.

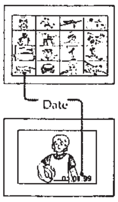

Before you begin

1 Turn on the printer and television and set the input selector of your television to "VIDEO."
2 Set INPUT SELECT to "MEMORY STICK/PC CARD."
3 Set PRESET PRINT to "OFF."

1 Set DATE to "ON."

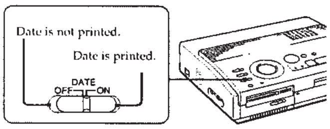

2 Select the desired print using the print mode dial.
You can select standard printing (page 20), split printing (page 27) or index printing (page 33).

3 Insert a "Memory Stick" or PC card and select the image(s) for printing.
For details of operating procedures, refer to the pages for the corresponding printing mode.

4 Press PRINT and insert the print paper.
The selected image is printed with the date.

Note
You cannot print the date when you print an image directly from your video equipment.

Making split prints

Printing images from a "Memory Stick" or PC card

You can make prints divided into multiples of 1/2-, 1/4- or 1/16-size pictures. You can select the same image, or different images for the split print.

Before you begin

1 Turn on the printer and television and set the input selector of your television to "VIDEO."
2 Set INPUT SELECT to "MEMORY STICK/PC CARD."
3 Set PRESET PRINT to "OFF."
4 Insert a "Memory Stick" or PC card into the "Memory Stick" or PC card insertion slot.

Printing the date
You can print the date recorded on the image by setting DATE to "ON."

1 Select the type of split using the print mode dial.
You can select 2-split, 4-split, 16-split planes of the same image or different images.

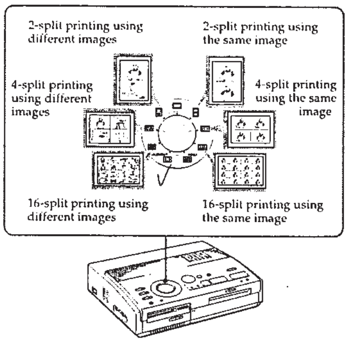

continued

2 Select the image.
- When selecting the same image for all the split planes:
  ① Press the arrow buttons to move the white frame to the image you want to print, then press ENTER. (The blue frame appears inside the white frame.)
  ② If you want to make other same image prints, repeat step ①.
- When selecting different images for each split plane:
  ① Press the arrow buttons to move the white frame to the image you want to print, then press ENTER. (The blue frame appears inside the white frame.)
  ② Repeat step ① to select images for the split planes in the desired order.

The pictures are placed from the upper left to the lower right on the sheet in order of the selection, not in order of the image list.

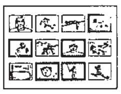

You can also select an image from different pages.
If you select more images than the number of split planes, the images are automatically placed on the next print.

Re-selecting the image
Move the white frame to the image you want to cancel and press ENTER. The blue frame disappears and the selection is canceled.
If you want to re-select the image after displaying the actual print image, press PICTURE to return to the thumbnail screen, then repeat step 2.

Re-selecting the type of split
Press PICTURE so that the thumbnail screen appears. Re-select the split type using the print mode dial. You can use the selected images, or change the selection.

Canceling the operation
Press CLEAR ALL. The selected image is removed and the printer returns to standby mode.
Perform printing procedures from the beginning.

Displaying the actual print image
Press CAPTURE.
The actual print image with the white frame (for the same image split printing) or the blue frame (for different image split printing) appears in the center of the screen.
To display multiple split prints, press ↑ or ↓.
To return to the thumbnail list, press PICTURE.

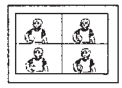
4-split printing using the same image

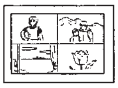
4-split printing using different images

Note
If you press PRINT when the actual print image is displayed, only the displayed image is printed.

3 Press PRINT and insert the print paper.
The selected images are printed.

Printing images from video equipment

You can make prints divided into multiples of 1/2-, 1/4- or 1/16-size pictures. You can also select the same image, or different images for the split print.

Before you begin

1 Turn on the printer and television and set the input selector of your television to "VIDEO."
2 Set INPUT SELECT to "VIDEO MOTION" or "VIDEO STILL."

1 Select the type of split using the print mode dial.
You can select 2-split, 4-split, 16-split planes of the same image or different images.

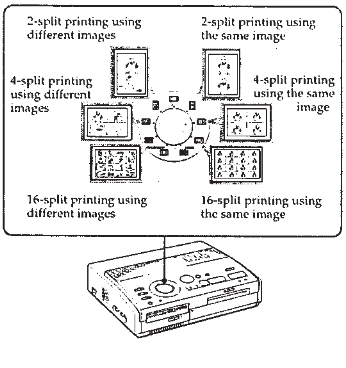

continued

Making split prints (continued)

2 Select the image.

• When selecting the same image for all the split planes:

① Turn on your video equipment and start playback.

② Press CAPTURE when the picture you want to print appears on the screen.

The memory image is displayed in the split planes selected in the step 1.

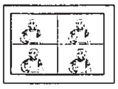

When you select 4-split printing

• When selecting different images for each split plane:

① Turn on your video equipment and start playback.

② Press CAPTURE when the picture you want to print appears on the screen.

The memory image is displayed in the first plane of the split planes selected in the step 1.

③ Press PICTURE so that the input picture appears in the screen.

④ Repeat steps ② through ③ until you select images for all of the split planes.

The selected pictures are allocated as follows:

upper left → upper right → lower left → lower right.

When you select 4-split printing

3 Press PRINT and insert the print paper.

The selected images are printed.

When you select "VIDEO MOTION"
When you set INPUT SELECT to "VIDEO MOTION," the selected image is blur-compensated in step ②.

Re-selecting the image
Press CLEAR ALL. The selected image is removed and the printer returns to standby mode.
Perform printing procedures from the beginning. You can also press CAPTURE again while the MEMORY indicator is flashing to re-select the image.
When you select split printing with the same image, you can also press PICTURE to display the input picture, then re-select a new image.

Note
You cannot select a number of images that exceeds the number of selected split planes.

Making a calendar

You can make a 12-month calendar with an image from a "Memory Stick," PC card or video equipment.

Before you begin

1 Turn on the printer and television and set the input selector of your television to "VIDEO."

2 • When printing from a card, set INPUT SELECT to "MEMORY STICK/PC CARD."

• When printing from video equipment, set INPUT SELECT to "VIDEO MOTION" or "VIDEO STILL."

3 Set PRESET PRINT to "OFF."

1 Select "▦ (calendar print)" using the print mode dial.

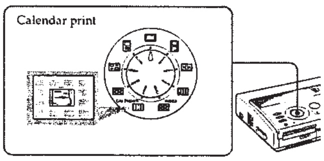

2 Select the image for printing.

• When printing from a "Memory Stick" or PC card

① Insert a "Memory Stick" or PC card into the "Memory Stick" or PC card insertion slot.

② Press the arrow buttons to move the white frame to the image you want to print, then press ENTER. (The blue frame appears inside the white frame.)

③ Press CAPTURE.

continued

Making a calendar (continued)

• When printing from your video equipment:

① Start playback on your video equipment.

② Press CAPTURE when the picture you want to print appears on the screen.

The selected image is placed in the center surrounded by the calendars for 12 months. Starting with the current month calendar in the upper left, the calendars for 12 months are placed from left to right, upper row to lower row.

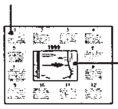

3 Press the arrow buttons (◆/◆) to select the first month of the calendar to be placed in the upper left.

Pressing ◆ displays the previous month. (After January, the December of the previous year is displayed.)
Pressing ◆ displays the next month. (After December, the January of the next year is displayed.)

4 Press PRINT and insert the print paper.

The calendar of the selected image is printed.

When you select "VIDEO MOTION"
When you set INPUT SELECT to "VIDEO MOTION," the selected image is blur-compensated in step ②.

Selecting a different image

- **When printing from a "Memory Stick" or PC card:**
  Press ♦ or ♦ to display the next or previous image in the image thumbnail list. To return to the thumbnail list, press PICTURE.
- **When printing from video equipment:**
  Press PICTURE to display the input images and re-select the image for printing again.
  You can also press CAPTURE again while the MEMORY indicator is flashing to re-select the image.

Note
If you do not adjust the clock correctly, the calendar does not start with the current month. See "Adjusting the clock" on page 12 to set the clock.

Making an index list of "Memory Stick" or PC card images

You can make an index list of images saved in a "Memory Stick" or PC card. When you want to search for the recorded image, you can find the desired images immediately with this index list.

Before you begin

1 Turn on the printer and television and set the input selector of your television to "VIDEO."

2 Set INPUT SELECT to "MEMORY STICK/PC CARD."

3 Set PRESET PRINT to "OFF."

1 Select "▦ (Index print)" using the print mode dial.

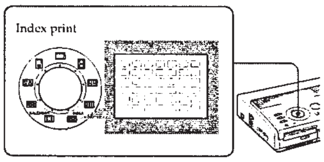

2 Insert a "Memory Stick" or PC card into the "Memory Stick" or PC card insertion slot.

All the images recorded in the "Memory Stick" or PC card are displayed in a thumbnail list.

If there are multiple pages, press ♦ or ♦ to display the next or previous page.

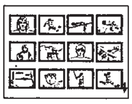

About date printing
Regardless of the DATE setting on the printer, the date of the image recorded on the "Memory Stick" or PC card is printed along with the image number above the index image. However, the date does not appear on the displayed image on the television screen.

continued

Making an index list of "Memory Stick" or PC card images (continued)

Note
- If you press PRINT when the actual print image is displayed (with the MEMORY indicator lit), only the displayed index list is printed.
- If you press PRINT when the thumbnail list is displayed (with the INPUT indicator lit), the index list being displayed and other index lists of the "Memory Stick" or PC card are printed. When the number of images is over 43, image number 43 or higher is printed on another sheet of print paper.
- If the number of images is less than 42, planes without images remain blank.
- The printer can handle up to 256 image files. If there are more than 256 images stored in the "Memory Stick" or PC card, the printer prints 256 images. The remaining images cannot be printed.
- The date is printed only when an image is shot with a digital still camera or video camera supporting the DCF98 format (an image file format for a digital still camera).

Displaying the actual print image

Press CAPTURE.

The actual print image of an index list with 42 thumbnails appears on the screen.

If there are multiple pages, press ♦ or ♦ to display the next or previous page.

To return to the thumbnail list, press PICTURE.

3 Press PRINT and insert the print paper.

The index list of the "Memory Stick" or PC card images is printed.

The images are made into the size of 42 thumbnails. Each thumbnail has a corresponding image number and date (year, month and day) shot with the digital still camera or video camera.

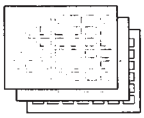

Printing "Memory Stick" or PC card images preset by a camera

Notes
- If you set PRESET PRINT to "OFF," the images preset by your digital still camera or video camera do not appear as the selected image. In this case, perform the normal printing procedures.
- In this print mode, you can make only a standard print regardless of the position of the print mode dial.
- When there is no specified image in the "Memory Stick" or PC card, "NO FILE" is displayed.
- For details on the preset print settings, refer to the operating instructions of the digital still camera or video camera you are using.
- Depending on the type of digital still camera and video camera, the preset printing function supported by the printer, or sometimes the function itself, is not available.
- If you press PRINT while displaying the actual print image, only the displayed image is printed.
- If you press PRINT while displaying the thumbnail list, all of the images in the thumbnail list are printed.

You can print images on a "Memory Stick" or PC card preset by your digital still camera or video camera.

Before you begin
1 Turn on the printer and television and set the input selector of your television to "VIDEO."
2 Set INPUT SELECT to "MEMORY STICK/PC CARD."

1 Set PRESET PRINT to "ON."

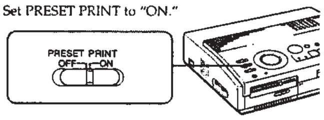

2 Insert a "Memory Stick" or PC card into the "Memory Stick" or PC card insertion slot.

The images preset by your digital still camera or video camera are displayed in the thumbnail list.

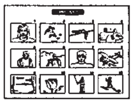

Displaying the actual print image

Press CAPTURE.

The first print image appears in the center of the screen. To display the next or previous print image, press ♦ (next image) or ♦ (previous image).

To return to the thumbnail list, press PICTURE.

3 Press PRINT and insert the print paper.

The preset images are printed in the order they have been preset.

Tip

The printer can automatically print the images preset with DPOF (Digital Print Order Format). The "DPOF" is a format to record the information necessary for automatically printing images shot with a digital still camera or video camera at a printing shop or with a home-use printer.

Printing "Memory Stick" or PC card images at one time

You can print the images on a "Memory Stick" or PC card at one time.

Before you begin
1 Turn on the printer and television and set the input selector of your television to "VIDEO."
2 Set INPUT SELECT to "MEMORY STICK/PC CARD."
3 Set PRESET PRINT to "OFF."

1 Select the desired print using the print mode dial.

You can select standard printing (page 20), split printing (page 27), calendar printing (page 31) or index printing (page 33).

2 Insert a "Memory Stick" or PC card into the insertion slot.

3 Press MENU.

The menu appears on your television.

Cursor

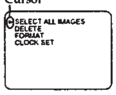

Television screen

Cancelling the selection

Press ♦ to select "CANCEL" and press ENTER. The menu display remains.

Cancelling the menu operations

Press MENU. The menu display disappears without saving the settings. The printer returns to standby mode.

4 Press ♦/♦ to move the cursor (▶) to "SELECT ALL IMAGES" and press ENTER.

The confirmation dialog box appears.

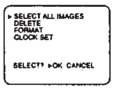

5 Make sure that "OK" is selected and press ENTER.

All of the images are selected and the menu reappears.

Canceling the selection

Press CLEAR ALL. The selection of all the images is canceled. Perform printing procedures from the beginning.

Notes
- If you press PRINT while displaying the actual print image, only the displayed image is printed.
- If you press PRINT while displaying the thumbnail list, all of the images in the thumbnail list are printed.
- The printer can handle up to 256 image files. If there are more than 256 images stored in the "Memory Stick" or PC card, use the supplied Sony Printer Utility for MS300E to transfer the images of the "Memory Stick" or PC card to your PC hard disk and then print them.

6 Press MENU.

The menu display disappears and all of the images in the thumbnail list are displayed with a blue frame.

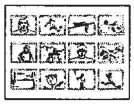

Displaying the actual print image

Press CAPTURE.

The first print image appears in the center of the screen. To display the next or previous print image, press ♦ (next image) or ♦ (previous image).

To return to the thumbnail list, press PICTURE.

7 Press PRINT and insert the print paper.

The specified images are printed in the order of the image number.

Recording a video picture as a still image

Note
Depending on the type of digital still camera or video camera, you cannot view the still images recorded by the printer.

You can record the playback picture from your video equipment onto a "Memory Stick" or PC card as a still image.

You can view the image with your digital still camera, process the image with the Sony Printer Utility for MS300E on your PC, or save the image as a general image file.

Before you begin

1 Turn on the printer and television and set the input selector of your television to "VIDEO."

2 Set INPUT SELECT to "VIDEO MOTION" or "VIDEO STILL."

1 Set print mode dial to "▭ (standard)."

2 Select the image to be recorded.

① Turn on and start playback on the video equipment.

② Press CAPTURE when the picture you want to record appears on the screen.

3 Insert a "Memory Stick" or PC card into the "Memory Stick" or PC card insertion slot.

Re-selecting the image
Press PICTURE. The playback picture appears on the screen. Follow step 2.

If you press CLEAR ALL, the printer is reset to standby mode.

Perform printing procedures from the beginning.

Notes
- When using the "Memory Stick," check that the write protect switch is set to the write enable position.
- When using the PC card, check the specifications of the card and that the card is in the write enable status.
- Check that the "Memory Stick" or PC card has sufficient free space for storing image file(s).

About file name of the recorded image
The image is recorded with the file name "MSP0####.jpg." The number "####" is sequentially allocated following the largest file number recorded in the "Memory Stick" or PC card.

About the number of images to be saved
The selected image is compressed and saved in the JPEG format. The number of image files that can be stored in a "Memory Stick" or PC card varies depending on the type of the image. Generally, a 4 MB "Memory Stick" or PC card can store about 40 to 60 images.

Notes
- The printer can save a maximum of 256 image files. This includes the number of images saved on a "Memory Stick" or PC card.
- The image recorded by the printer may not be viewed with other devices.
- You cannot save an image with a file name with "DCIM" or "100MSDCF."

4 Press SAVE.

The access indicator for the "Memory Stick" or PC card insertion slot lights up, and the displayed image is recorded onto the "Memory Stick" or PC card.

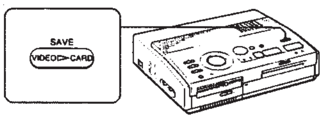

If an error message appears

Error message	Meaning
FORMAT ERROR	The inserted "Memory Stick" or PC card is not formatted. Insert a formatted "Memory Stick" or PC card or format it with the printer.
MS/PC CARD FULL	There is not enough space to record the image or the maximum number of images are already recorded. Replace the "Memory Stick" or PC card with a formatted one.
LOCKED	The "Memory Stick" or PC card is in the write protect status. Set it to the write enable status.

Deleting "Memory Stick" or PC card images

Notes
- An image, once deleted, will be lost forever. Before deleting an image, double-check that it is the right one.
- You can delete up to 256 images.
- If the "Memory Stick" or PC card is in write protect status, you cannot delete the images.
- If the image is protected, the protect mark (⊶) appears left above the image of the thumbnail list on the screen. "FILE PROTECT" is displayed if you try to delete the image. To release protection, refer to the operating instructions of your digital still camera or video camera.
- While "DELETING" is displayed, do not turn off the power, remove the "Memory Stick" or PC card from the insertion slot, or press other operation buttons on the printer. The "Memory Stick" or PC card may be damaged.

Cancelling the deletion
Make sure that "CANCEL" is selected in step 3 and press ENTER.

Cancelling the menu operations
Press MENU. The menu display disappears without saving the settings.

You can delete the images on a "Memory Stick" or PC card.

Before you begin

1 Turn on the printer and television and set the input selector of your television to "VIDEO."

2 Set INPUT SELECT to "MEMORY STICK/PC CARD."

3 Set PRESET PRINT to "OFF."

4 Insert a "Memory Stick" or PC card into the "Memory Stick" or PC card insertion slot.

1 Select the image to be deleted.

①Press the arrow buttons to move the white frame to the image you want to delete, then press ENTER. (The blue frame appears inside the white frame.)

②If you want to delete other images, repeat step ①.

2 Press MENU.

The menu appears on the television.

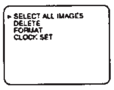

Television screen

3 Press ♦/♦ to move the cursor (▶) to "DELETE" and press ENTER.

The confirmation dialog appears.

4 Press ♦ to select "OK" and press ENTER.

The selected images are deleted.

5 Press MENU.

The menu display disappears and the printer returns to standby mode.

Notes
- When you format a "Memory Stick" or PC card, all the images including protected files are deleted.
  Before formatting, double-check the contents.
- If the "Memory Stick" or PC card is in write protect status, you cannot format the images. Check that the "Memory Stick" or PC card is in the write enable status.
- While "FORMATTING" is displayed, do not turn off the power, remove the "Memory Stick" or PC card from the insertion slot, or press other operation buttons on the printer. The "Memory Stick" or PC card may be damaged.
- If a disk error occurred during formatting or the formatted card cannot be read or written with your digital still camera, format it again with the digital still camera.

Cancelling the formatting
Make sure that "CANCEL" is selected in step 2 and press ENTER.

Formatting the card

You can format a "Memory Stick" or PC card.

Before you begin

1 Turn on the printer and television and set the input selector of your television to "VIDEO."

2 Set INPUT SELECT to "MEMORY STICK/PC CARD."

3 Set PRESET PRINT to "OFF."

4 Insert a "Memory Stick" or PC card into the "Memory Stick" or PC card insertion slot.

1 Press MENU.

The menu appears on the television.

2 Press ♦/♦ to move the cursor (▶) to "FORMAT" and press ENTER.

The confirmation dialog appears.

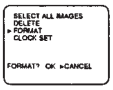

3 Press ♦ to select "OK" and press ENTER.

The "Memory Stick" or PC card is formatted.

4 Press MENU.

The menu display disappears and the printer returns to standby mode.

About "Memory Stick"

About "Memory Stick"

"Memory Stick" is the removable storage media used with a digital still camera, video camera, or PC. You can easily display, save and delete the images.

Notes on using the "Memory Stick"

- Avoid touching the connector of the "Memory Stick" or contacting it with a metal object.
- When attaching a label to the "Memory Stick" as specified in the next page, use the label supplied for the "Memory Stick" only. Do not use any other labels.
- Do not drop, bent, or submit the "Memory Stick" to external shock.
- Do not disassemble or modify the "Memory Stick."
- Avoid getting liquids on the "Memory Stick."
- Avoid using or storing the "Memory Stick" in a location subject to:
  - extremely high temperature such as the hot inside of a car or the outdoors exposed to a burning sun, or a place near a heater.
  - direct sunlight
  - high humidity
  - corrosive substances
  - excessive dust
- When storing and carrying the "Memory Stick," keep it in its original case to ensure protection of important data.
- Avoid removing the "Memory Stick" from the insertion slot while the access indicator is lit—the printer is reading or writing the data on the "Memory Stick."

- In the following cases, the stored data may be damaged or erased:
  - when turning off the power of the printer or when removing the "Memory Stick" from the insertion slot while the printer is accessing the "Memory Stick."
  - when using the "Memory Stick" near magnets or magnetic fields

To protect images

To prevent accidental erasure of important image data, use the write protect switch on the "Memory Stick." Slide the switch to the write protect or write enable position:

❒ **Write enable position**
Slide the switch left to the write enable position. You can read, write and delete data on the "Memory Stick." Formatting the "Memory Stick" is also enabled. When storing video pictures on the "Memory Stick," set the switch to the write enable position.

❒ **Write protect position**
Slide the switch right to the write protect position. It is now impossible to write or delete the data on the "Memory Stick." We suggest you set the switch to the write protect position while just viewing the "Memory Stick" images.

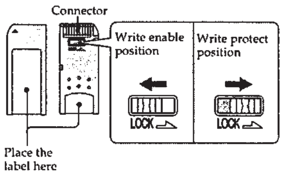

About PC cards

Notes
- You cannot use the PC cards with the power specification of 3V only.
- Do not insert other types of PC card into the printer's insertion slot. The printer may be damaged.

The printer's PC card insertion slot can read and write PCMCIA ATA compatible type II flash memory cards with a power specification of 5V or 3.3/5V. By using a commercially available PC card adaptor, you can also use Smart Media and other types of compact flash cards.

Notes on using the PC card

- Do not drop, bent, or submit the PC card to external shock.
- Do not disassemble or modify the PC card.
- Avoid getting liquids on the PC card.
- Avoid using or storing the PC card in a location subject to:
  - extremely high temperature such as the hot inside of a car or the outdoors exposed to a burning sun, or a place near a heater.
  - direct sunlight
  - high humidity
  - corrosive substances
  - excessive dust
  - electrostatic or electronic noises
  - magnetic fields
- Avoid removing the PC card from the insertion slot while the printer is accessing the PC card. Otherwise, data may be rendered unreadable.
- When using a compact flash card or Smart Media, use a commercially available PC card adaptor that is compatible with the card. Attach the card into the adaptor and then insert it into the printer. For how to install the card and adaptor, refer to the operating instructions of the PC card adaptor.
- Avoid inserting or removing the compact flash card or Smart Media into or out of the PC card adaptor while the PC card adaptor is inserted in the printer. The data may be rendered unreadable or erased.
- For using the compact flash card or Smart Media, refer to the operating instructions of both the card and your digital still camera or video camera.

SECTION 2
DISASSEMBLY

Note: Follow the disassembly procedure in the numerical order given.

UPPER CABINET ASS'Y

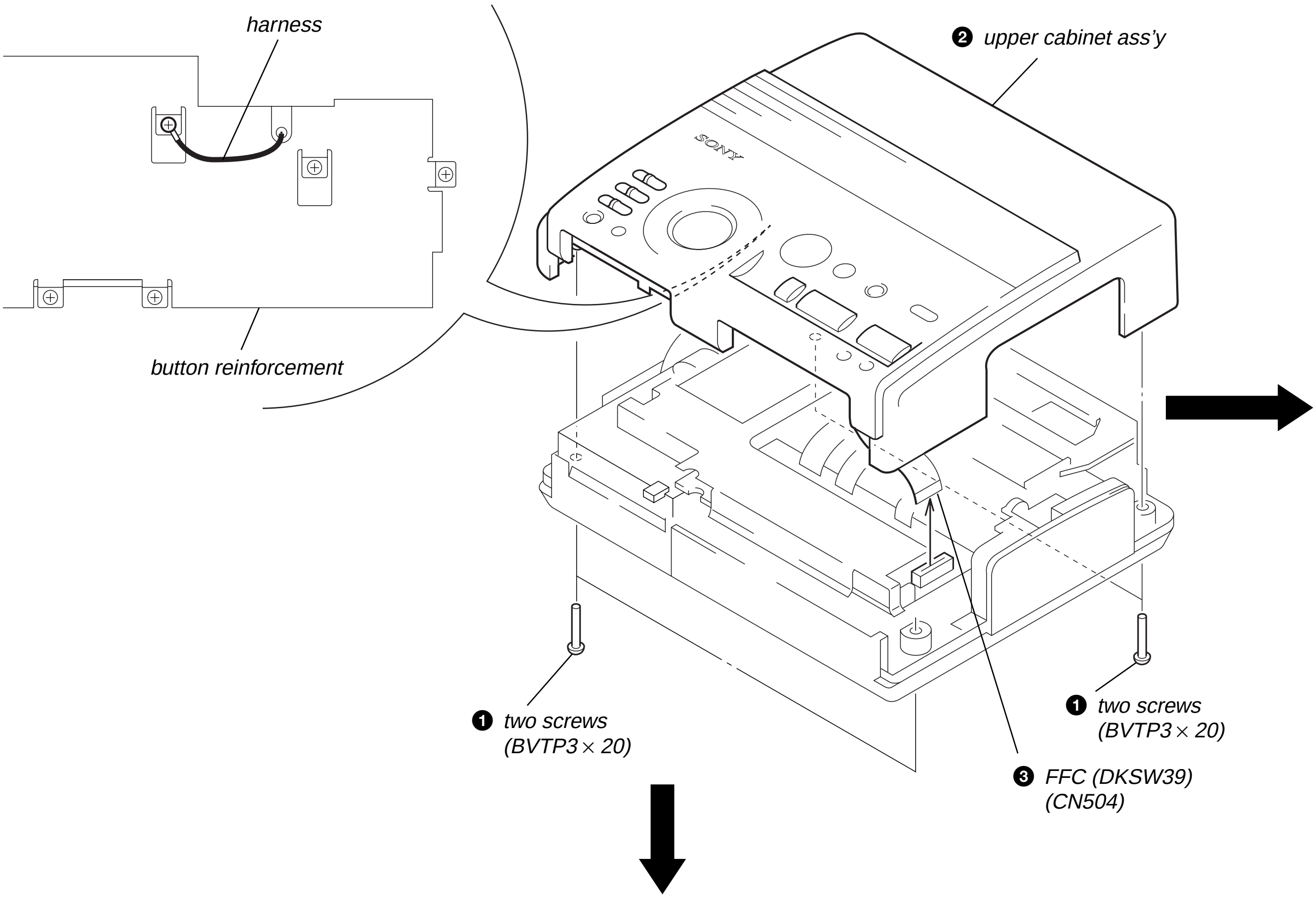

DC FAN (HEAD FAN) (M901)

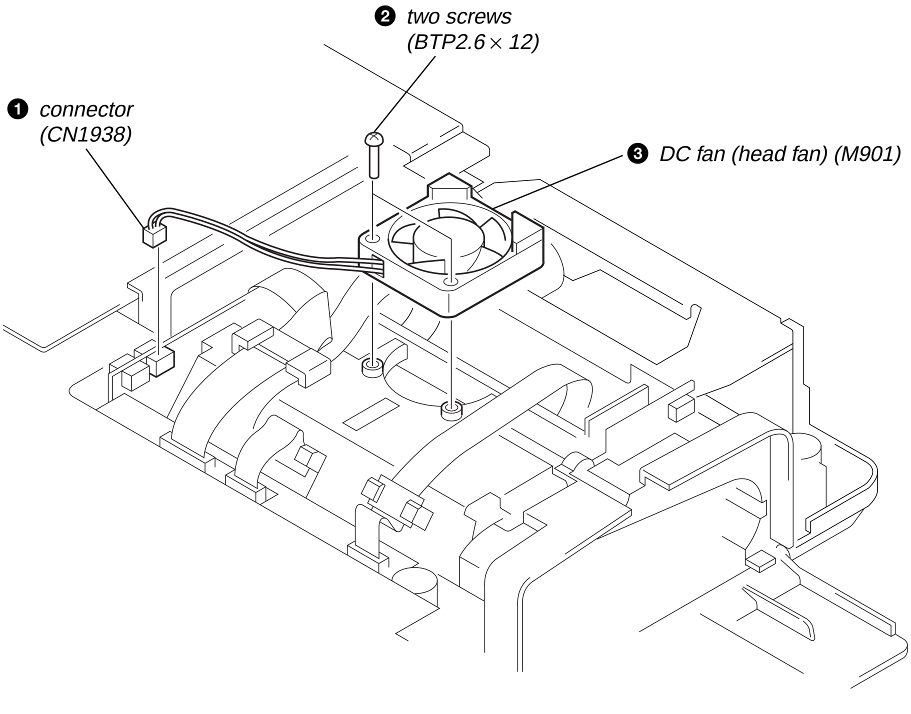

VI-40/JK-40 BOARD SECTION, DC FAN (POWER FAN) (M905)

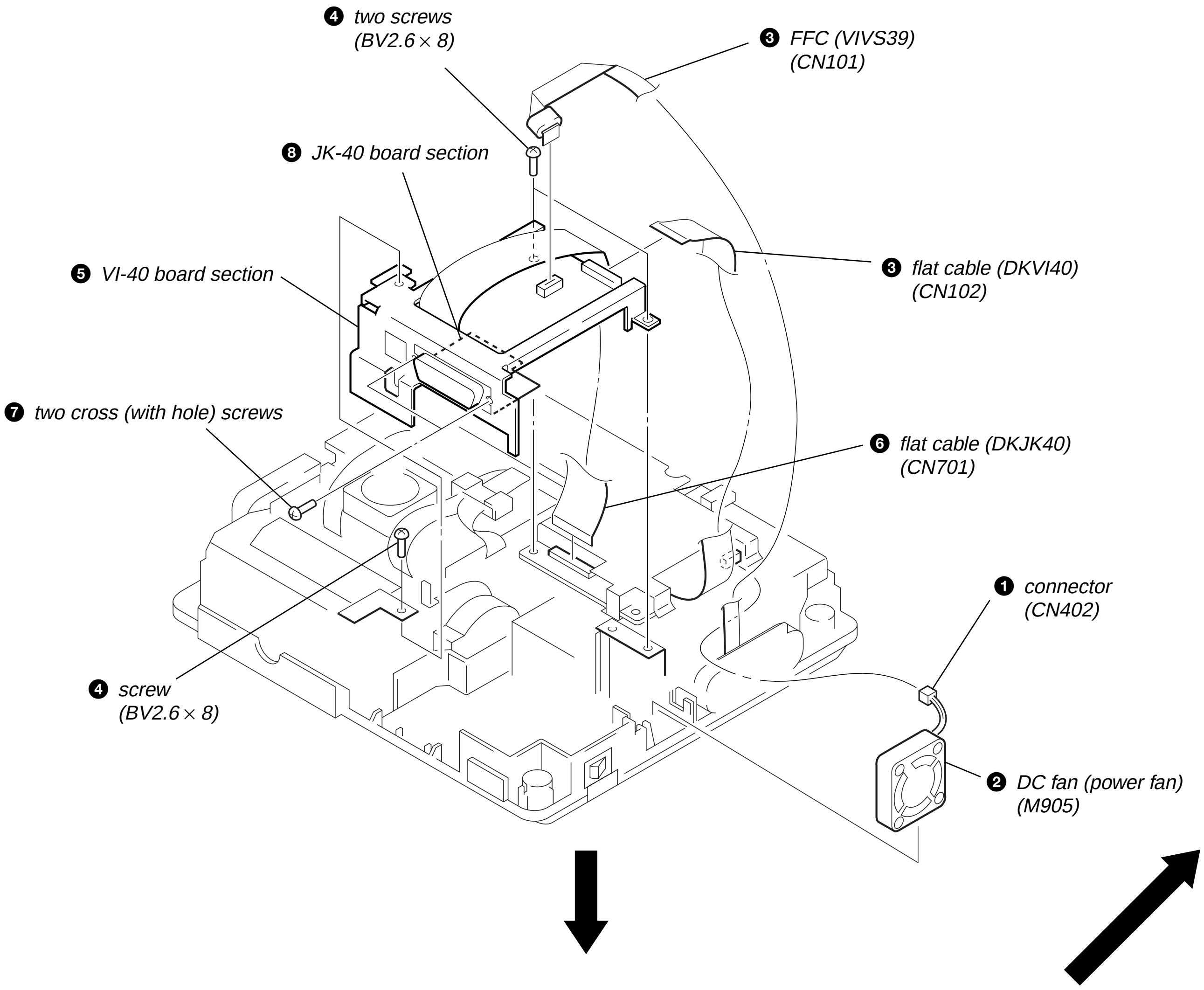

DK-40 BOARD SECTION

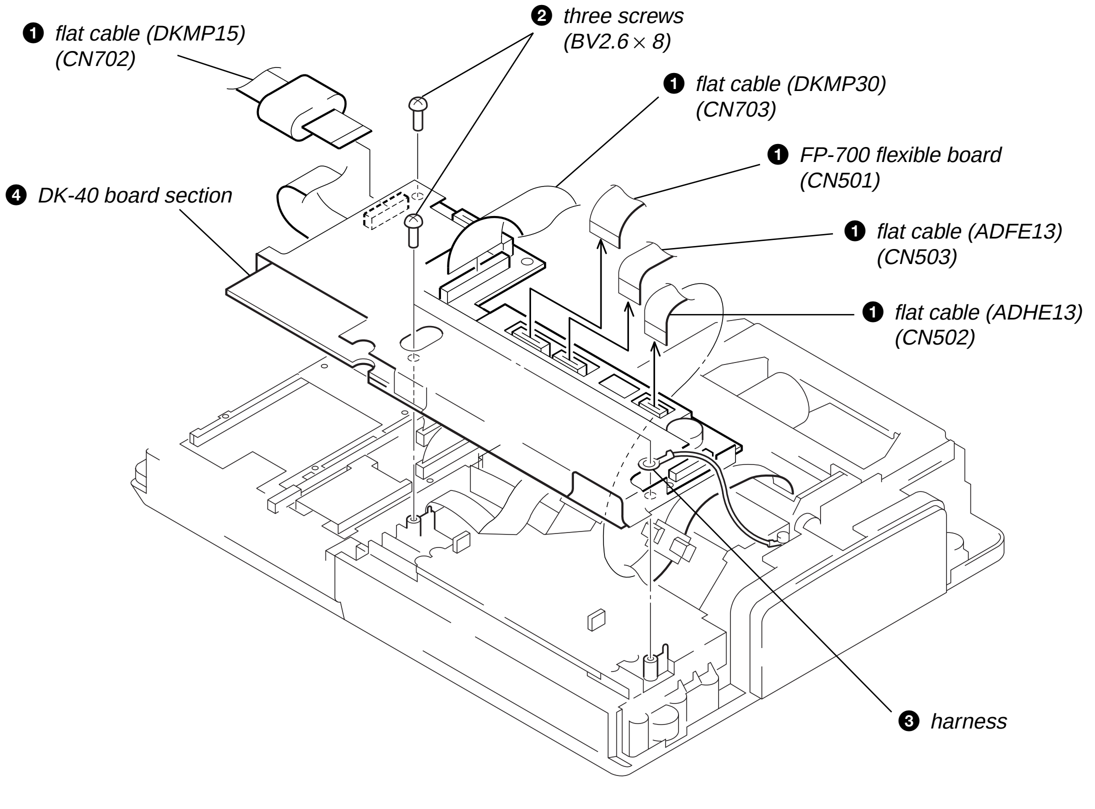

MP-40 BOARD SECTION

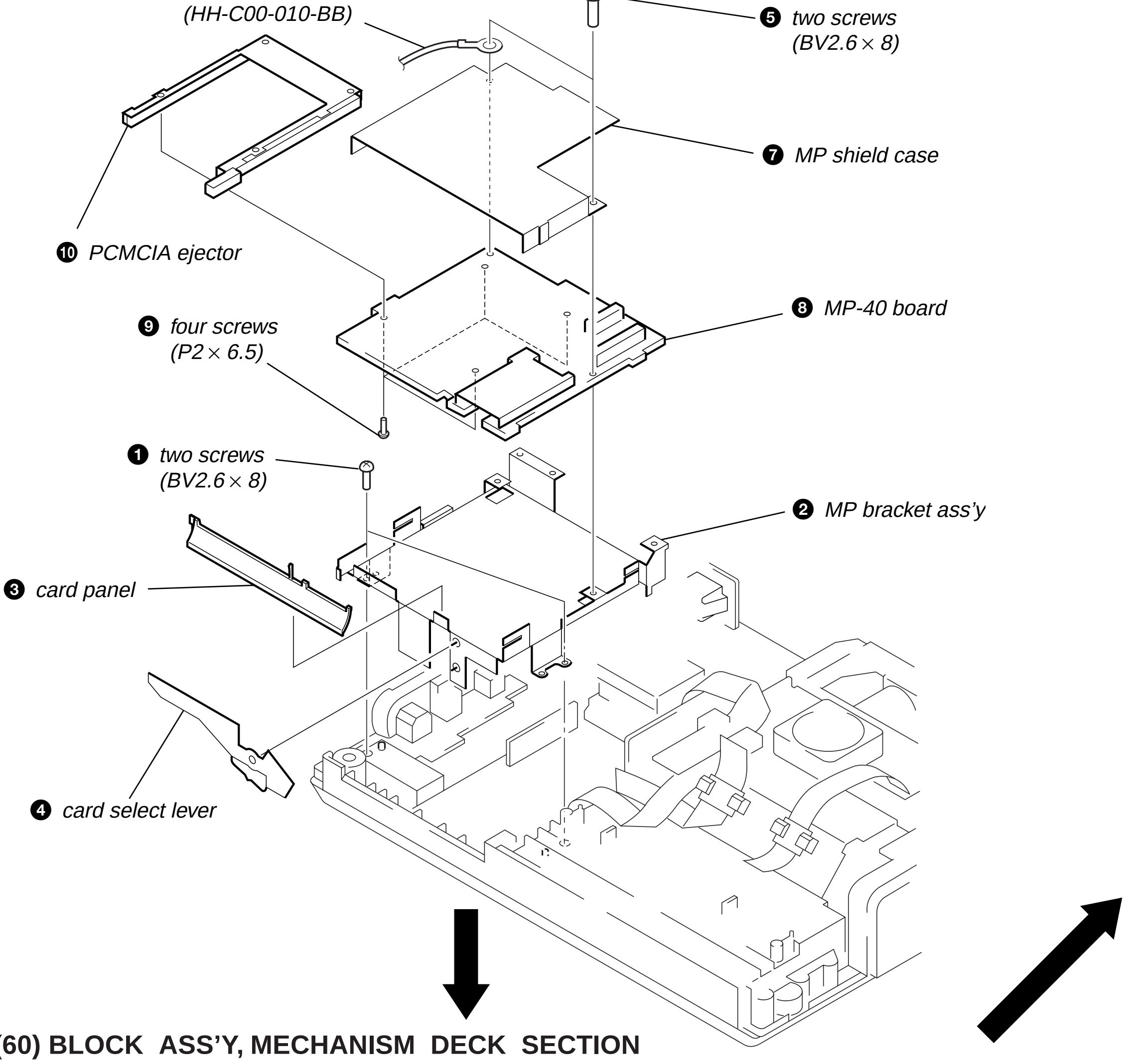

ESCUTCHEON (60) BLOCK ASS'Y, MECHANISM DECK SECTION

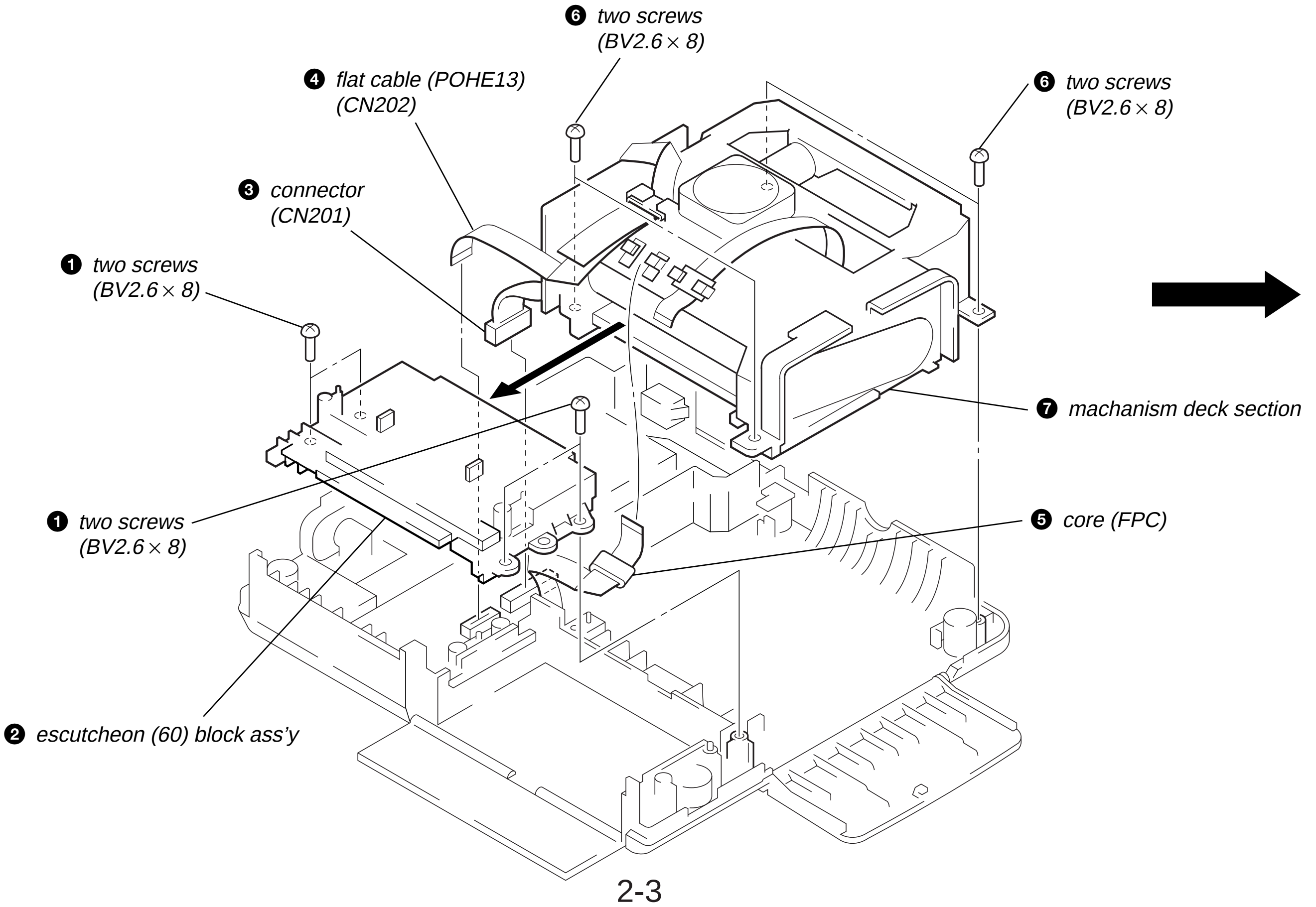

HEAD MOTOR BLOCK ASS'Y (HEAD UP/DOWN) (M902)

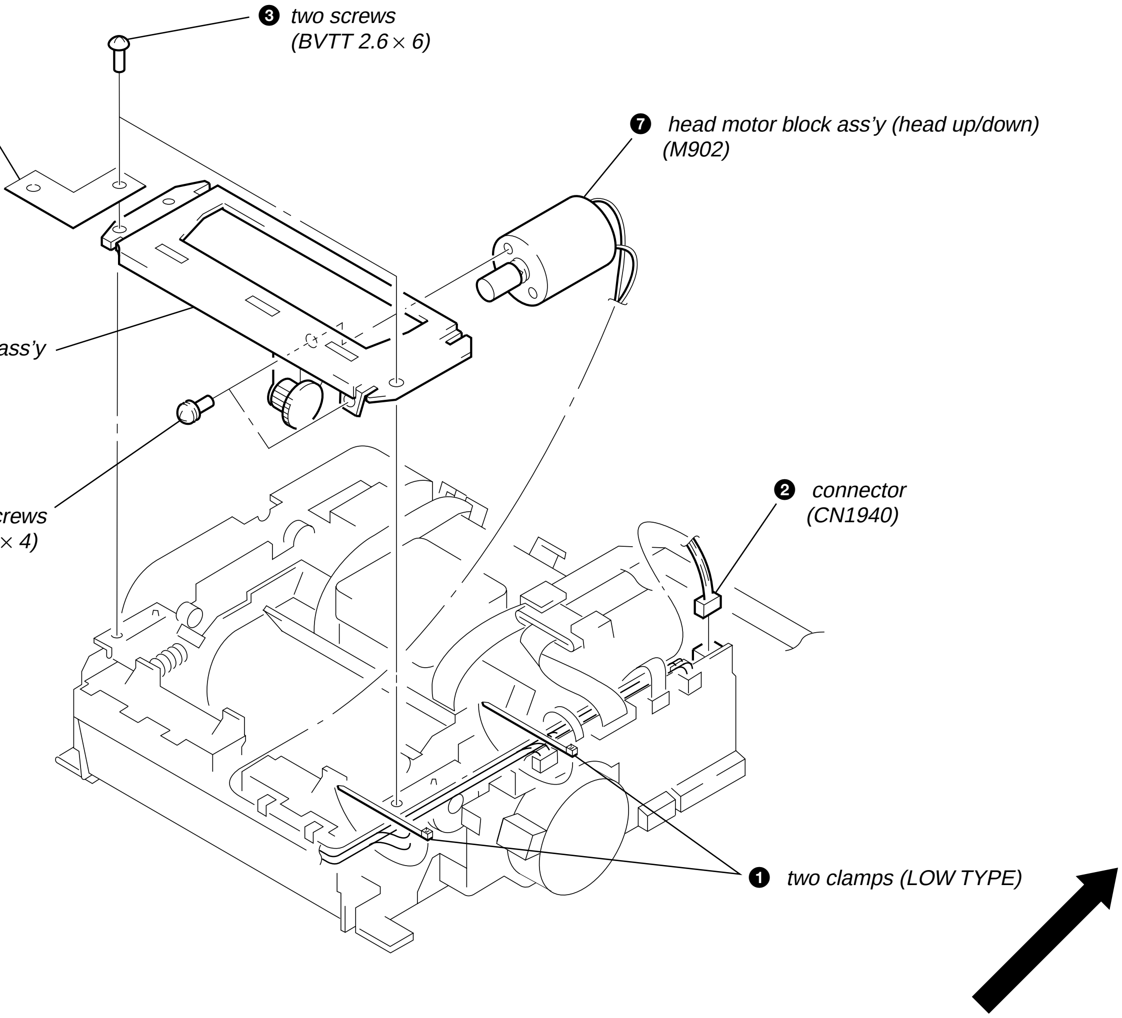

MD-40 BOARD

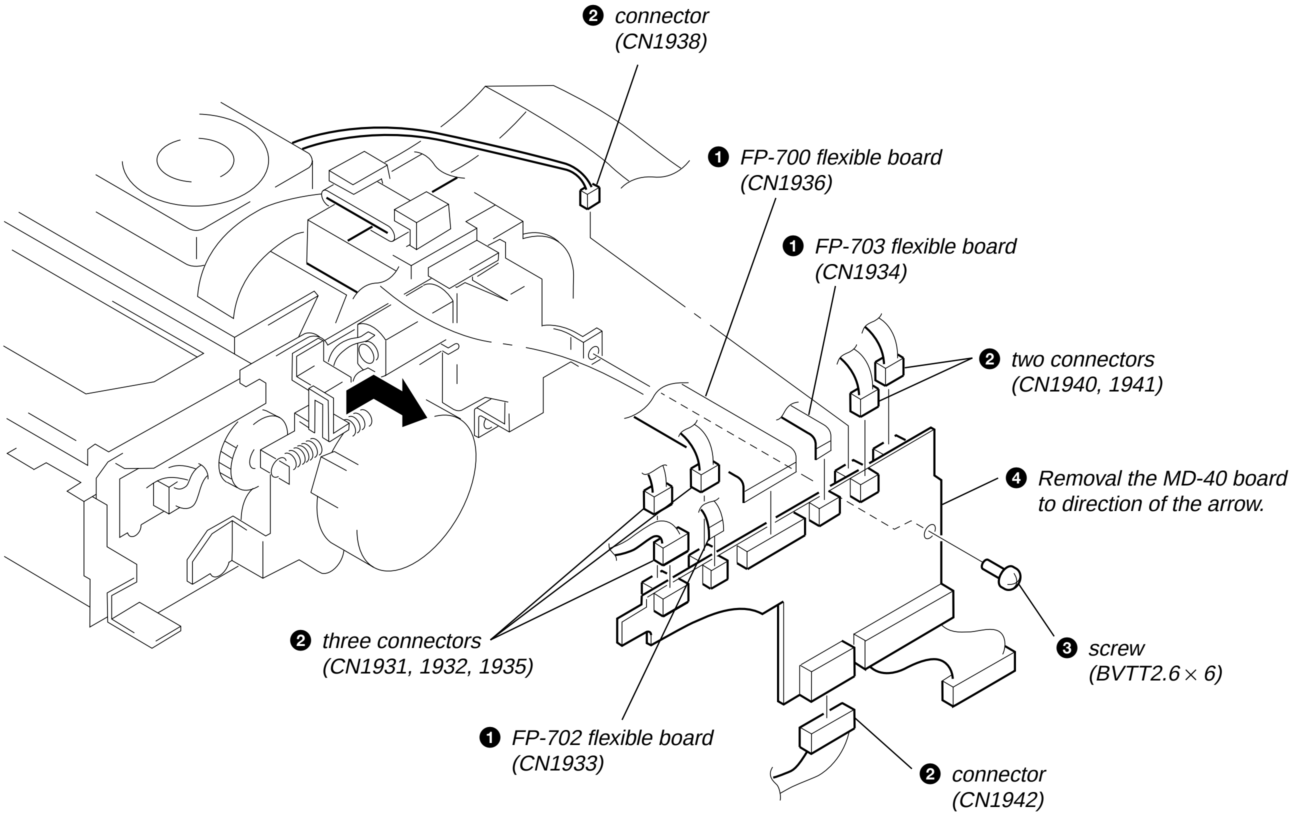

DC MOTOR (STEPPING MOTOR) (PLATEN) (M904), REEL MOTOR BLOCK ASS'Y (RIBBON) (M903)

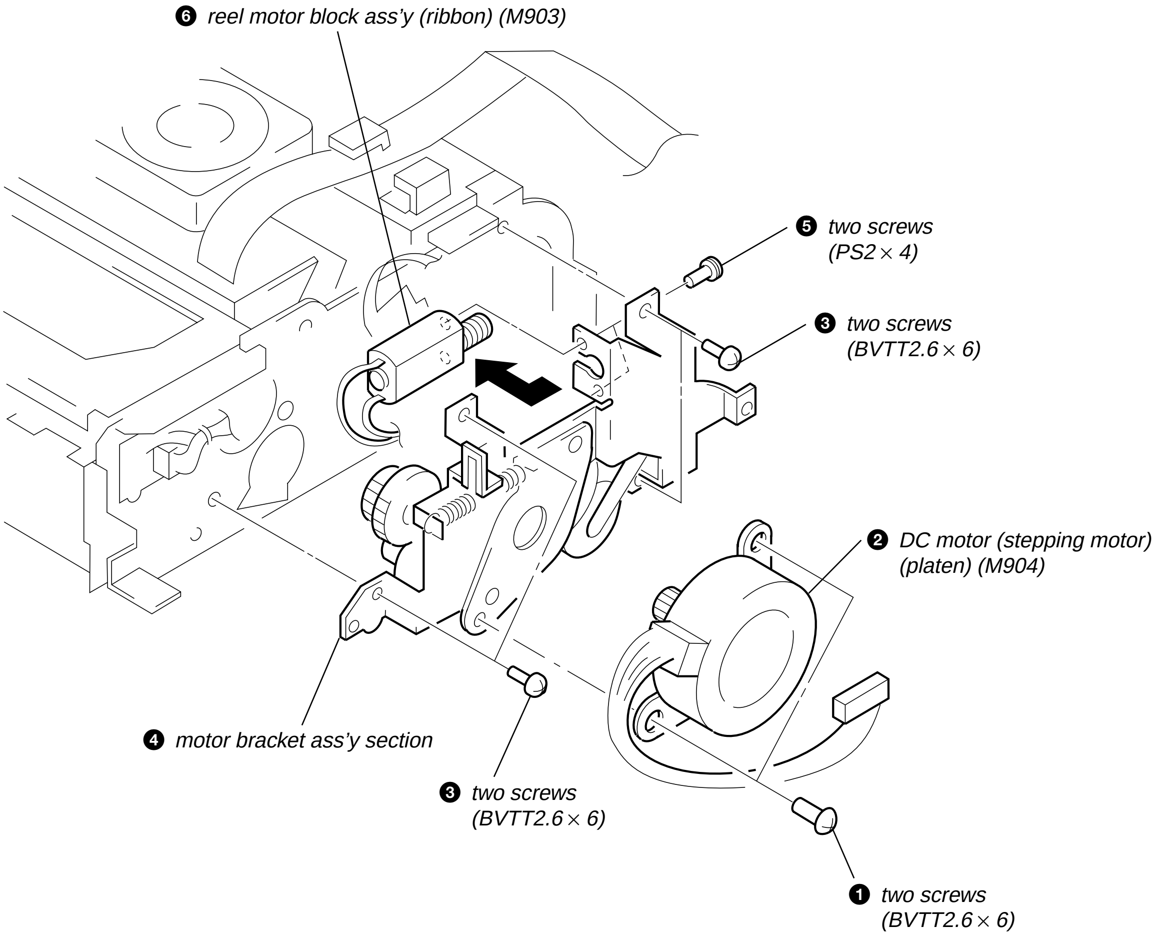

SECTION 3
MECHANICAL ADJUSTMENTS

Replacing the Thermal Head

1) Before replacing the head, print the stair-step pattern with the old head (faulty head).
   Note 1: Only when the head is not entirely damaged with black or white lines.
   Note 2: To reproduce the stair-step pattern, refer to “Adjusting Method 1” in “4. Electrical Adjustments”.
2) Remove the upper cabinet. (Refer to “2. Disassembly”.)
3) Remove the flat cables ❶ (POHE13) and ❷ (ADHE13) from the thermal head. (Refer to Fig. 1)
4) Remove the two screws ❸ (BVTT2.6 × 6) and remove the harnesses ❹ and fan holder ❺. (Refer to Fig. 1)
5) Remove screw ❻, (PS2.6 × 4) and remove the ribbon guide ❼. (Refer to Fig. 2)
6) Remove the two screws ❽ (PSW2.6 × 8) and remove the thermal head ❾ from the heat sink ❿. (Refer to Fig. 2)
   Note: Do not remove the screw ⓬ fixing the heat sink ❿ and head arm ⓫.
7) Replace the thermal head ❾.
   Note: Make sure that the silicon grease (white) does not stick onto the printing screen of the thermal head. If it does, remove with alcohol.
8) Assemble in the reverse order of steps 2) to 6).
9) Perform “Head Voltage Adjustment” of “4. Electrical Adjustments” (Page 4-3).

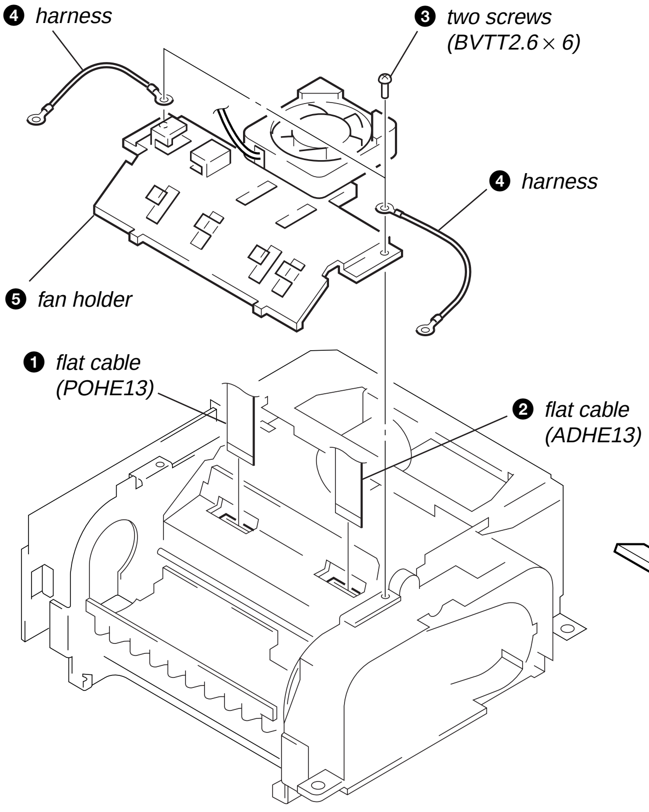

Fig. 1

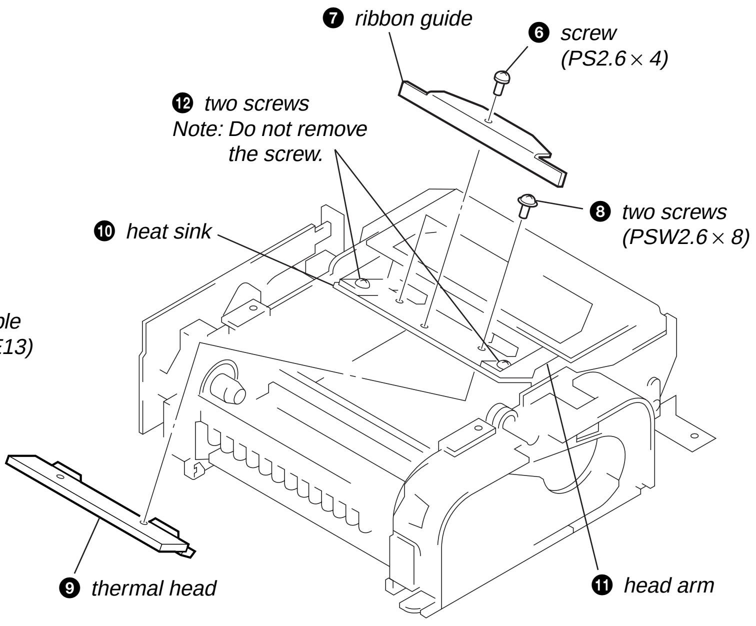

Fig. 2

SECTION 4
ELECTRICAL ADJUSTMENTS

During the adjustment, see the Adjustment and Adjustment Pats on page 4-7.

Pre-Adjustment Preparations

1. Equipment required
   Electrical adjustment requires the following measuring equipment.

(1) Monitor TV
(2) Oscilloscope: 2 phenomena, bend 30 MHz or more, with delay mode (use 10 : 1 probe unless otherwise specified)
(3) Frequency counter
(4) Pattern generator
(5) Digital voltmeter
(6) Video print paper
(7) Video print cartridge
(8) Vector scope

2. Connection of Equipment
Following the designation of input terminal (S-VIDEO or VIDEO), connect measuring units as shown in Fig. 4-1 and make adjustment.
The input terminal is designated with (   ) in the signal column.
Unless otherwise designated, either input terminal may be used.

Note: In the adjustment where the S-VIDEO input is designated, if adjustment was made with the VIDEO input. The specification of this set will not be satisfied. Always follow the designation.
If adjustment was made using the VTR with S-VIDEO OUT terminal as a signal source, the performance of this set depends on that VTR. Therefore, use the pattern generator with the Y/C separate output terminals, if possible.

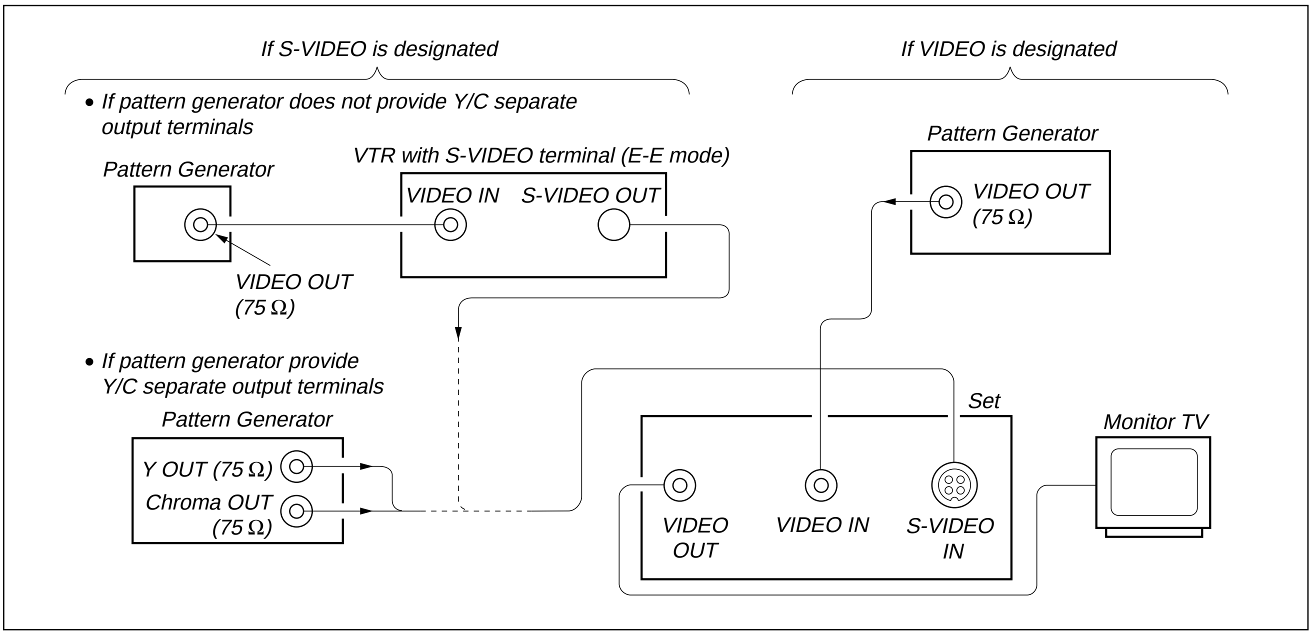

Fig. 4-1

3. Input Signal Check
The video circuit adjustment uses as adjustment signals the video signals obtained from the pattern generator, and therefore these video output signals must be within the specification.

(1) When S-VIDEO is input
Connect an oscilloscope to the Y signal pin of the S-VIDEO IN connector, and check that the sync signal of Y signal is 300 mV, video amplitude is 700 mV, and the setup level is 0 mV. (If using the VTR with S-VIDEO OUT terminal, check further that the chroma signal and burst signal do not remain.)
Also, connect an oscilloscope to the chroma signal pin of the S-VIDEO IN connector, and check that the burst signal amplitude of chroma signal is 300 mV and it is flat, and moreover, the amplitude ratio of burst signal to chroma signal is 0.30 : 0.66. The Y signal and chroma signal used for adjustment are shown in Fig. 4-2.

Setup level: Potential difference between black and pedestal

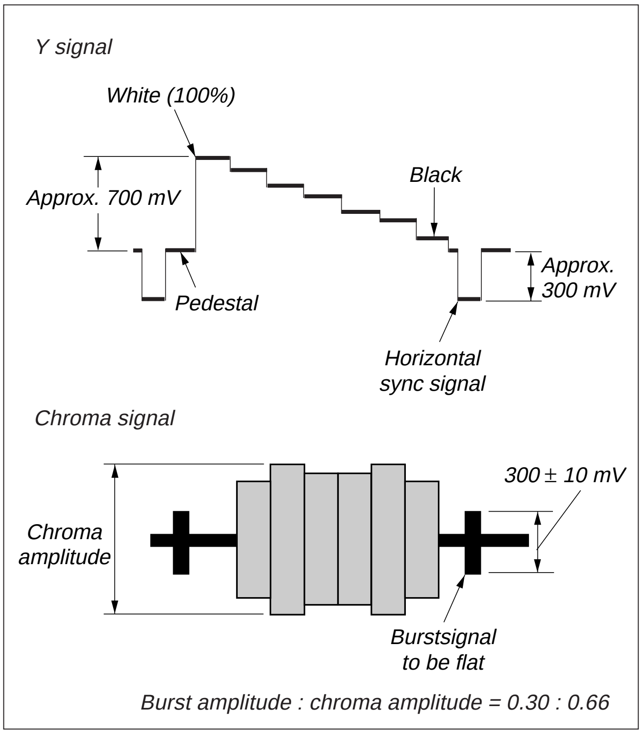

Fig. 4-2 Color bar signals of pattern generator (at terminating resistance 75 Ω)

(2) When VIDEO is input
Connect an oscilloscope to the VIDEO IN terminal, and check that the sync signal amplitude of VIDEO signal is 300 mV, video amplitude is 700 mV, the setup level is 0 mV, and the burst signal amplitude is 300 mV and it is flat. Also, check that the level ratio of burst signal to red signal is 0.3 : 0.66.
The VIDEO signal (color bars) used for adjustment is shown in Fig. 4-3.

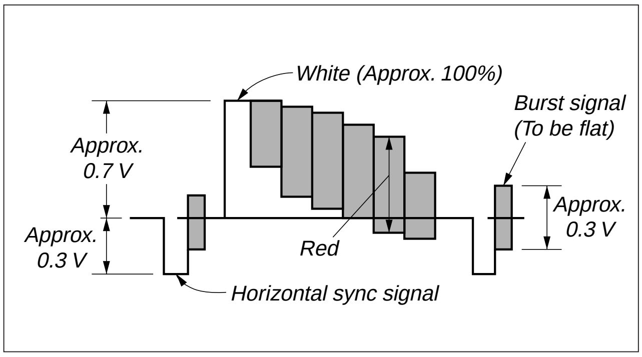

Fig. 4-3 Color bar signal of pattern generator (at terminating resistance 75 Ω)

POWER SUPPLY BLOCK

[Head Voltage Adjustment]

Before performing this adjustment, print the stair-step pattern (Note 2) two times continuously with the old head (Note 1) or normal unit. The second print will be used as a sample of the print density.

Note 1: Only when the old head (faulty head) is not entirely damaged with black or white lines.

Note 2: To print the stair-step test pattern, turn on the power switch while pressing the S1707 (CAPTURE) and S1717 (ENTER) on the SW-40 board.
(Press the S1707 (CAPTURE) and S1717 (ENTER) until a peep is heard.) Set the S1701 (Rotaly switch) to the ▆ position, and press the S1706 (print), then the print will start.

Mode	Test mode (Note 2)
Signal	Test pattern (Stair-step)
Measuring points	+: CN1943 ② pin (MD-40 board) –: CN1943 ③ pin
Measuring instrument	Digital Voltmerter
Adjustment part	VR201
Specification	Print density should be the same as the sample

Adjustment Procedure:

(1) To print the stair-step test pattern, turn on the power switch while pressing the S1707 (CAPTURE) and S1717 (ENTER) on the SW-40 board.
(Press the S1707 (CAPTURE) and S1717 (ENTER) until a peep is heard.) Set the S1701 (Rotaly switch) to the ▆ position, and press the S1706 (print), then the print will start.

(2) After printing, repeat (1) immediately.

(3) Compare the second printed pattern density with that of the sample, and if the density differs, perform the following adjustment.

(4) Adjust VR201 according to the print density.
If darker than the sample: Decrease the head voltage.
If lighter than the sample: Increase the head voltage.

(5) Print the stair-step pattern two times continuously.

(6) Compare the second printed pattern density with that of the simple, and if the density differs, repeat steps (3) to (6).

Note: Only one print is required after the second time.

(7) Turn off the power switch.

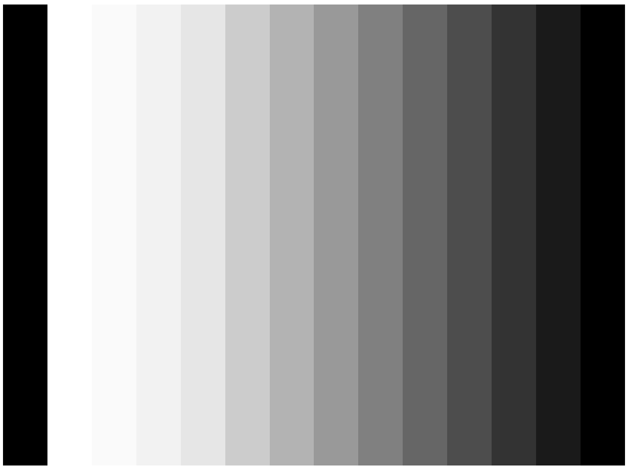

Fig. 4-4 Stair-step pattern

* VR201 is in the power block (1-468-364-51).

Adjustment Location:

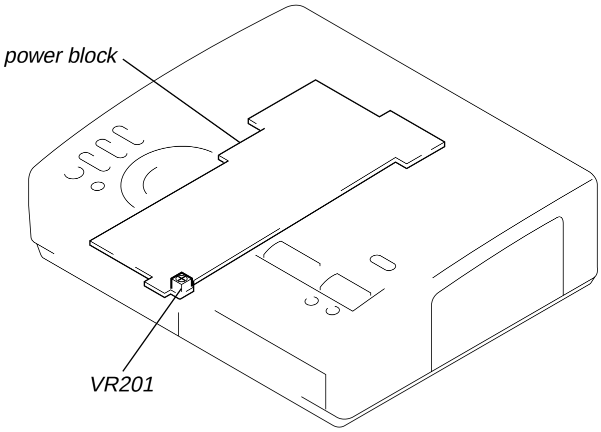

VIDEO BLOCK

[Free-Run Frequency Adjustment (1)] (VI-40 board)

Mode	VIDEO Input
Signal	Color bar (S-VIDEO IN) (Note 1)
Measuring point	IC108 ⑱ pin
Measuring equipment	Frequency Counter
Adjustment part	CT102
Specification value	4.433619 MHz ± 30 Hz

Note 1: Connect IC108 ⑤ pin to the GND via 0.1μF capacitor (chroma signal grounded.)

Adjustment Procedure:

(1) Connect IC108 ⑦ pin to the GND via 1 MΩ resisitor.
(2) Adjust CT102 so that the frequency counter reading satisfies the specification value.

[Free-Run Frequency Adjustment (2)] (DK-40 board)

Mode	VIDEO Input
Signal	Color bar (S-VIDEO IN)
Measuring point	IC407 (113) pin
Measuring equipment	Frequency Counter
Adjustment part	CT500
Specification value	14.21875 MHz ± 100 Hz

Adjustment Procedure:

(1) Adjust CT500 so that the frequency counter reading satisfies the specification value.

[910fh Adjustment] (DK-40 board)

Mode	VIDEO Input
Signal	Color bar (S-VIDEO IN)
Measuring point	IC401 ⑪ pin (or CL427)
Measuring equipment	Digital Voltmeter
Adjustment part	CT401
Specification value	2.5 ± 0.1 Vdc

Adjustment Procedure:

(1) Adjust CT401 so that the digital voltmeter reading satisfies the specification value.

[Y/C Separation Y Level Adjustment] (VI-40 board)

Mode	VIDEO Input
Signal	Color bar (VIDEO IN)
Measuring point	CL138
Measuring equipment	Oscilloscope
Adjustment part	RV103
Specification value	700 ± 10 mVp-p

Adjustment Procedure:

(1) Adjust RV103 so that the Ⓐ level (white) of waveform on the oscilloscope satisfies the specification value.

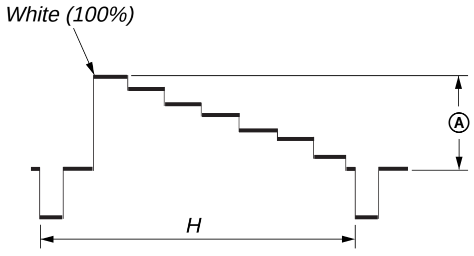

Fig. 4-5

[Y/C Separation CHROMA Level] (VI-40 board)

Mode	VIDEO Input
Signal	Color bar (VIDEO IN)
Measuring point	CL129
Measuring equipment	Oscilloscope
Adjustment part	RV102
Specification value	300 ± 5 mVp-p

Adjustment Procedure:

(1) Adjust RV102 so that the Ⓐ level (white) of waveform on the oscilloscope satisfies the specification value.

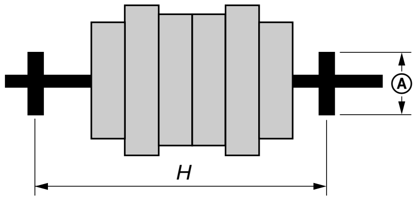

Fig. 4-6

[1H Delay Adjustment] (VI-40 board)

Mode	VIDEO Input
Signal	Color bar (S-VIDEO IN)
Measuring point	FL106 ③ pin
Measuring equipment	Oscilloscope
Adjustment part	RV105, 250, CT250

Adjustment Procedure:

(1) Set RV105 so that the luminescent spot of center.
(2) Set RV250 and CT250 so that the luminescent spots of phase and gain.

[D/A Output Y Level Adjustment] (DK-40 board)

Note: Turn of the power switch once, then turn it on again.

Mode	VIDEO Input
Signal	Color bar (VIDEO IN)
Measuring point	J1802 (OUTPUT)
Measuring equipment	Oscilloscope
Adjustment part	RV401
Specification value	700 ± 5 mVp-p

Adjustment Procedure:

(1) Adjust RV401 so that the Ⓐ level (white) of waveform on the oscilloscope satisfies the specification value.

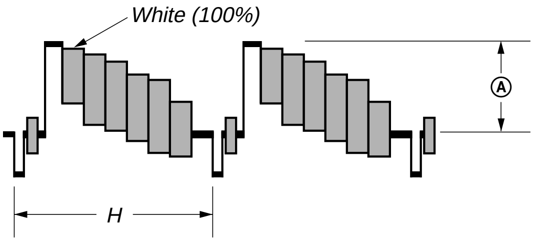

Fig. 4-7

[D/A Output CHROMA Level Adjustment] (DK-40 board)

Mode	VIDEO Input
Signal	Color bar (VIDEO IN)
Measuring point	J1802 (OUTPUT)
Measuring equipment	Oscilloscope
Adjustment part	RV402
Specification value	681 ± 5 mVp-p

Adjustment Procedure:

(1) Adjust RV402 so that the Ⓐ level (Red) of waveform on the oscilloscope satisfies the specification value.
(2) Turn off the power switch.

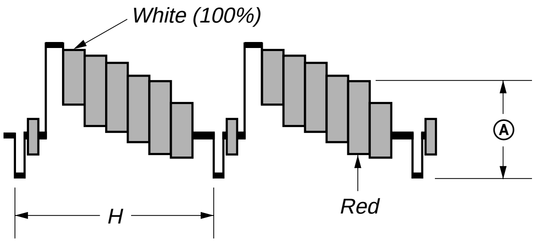

Fig. 4-8

[A/D Input Y Level Adjustment] (DK-40 board)

Note: Turn off the power switch once, then turn it on again.

Mode	VIDEO Input
Signal	Color bar (S-VIDEO IN)
Measuring point	CL409
Measuring equipment	Oscilloscope
Adjustment part	RV404
Specification value	1.30 ± 0.01 Vp-p

Adjustment Procedure:

(1) Connect on oscilloscope to the CL409 (from IC407 ㊹ pin to the point via R478).
(2) Adjust RV404 so that the Ⓐ level (white) of waveform on the oscilloscope satisfies the specification value.

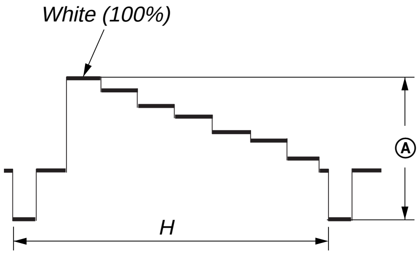

Fig. 4-9

[A/D Input R-Y/B-Y Level Adjustment] (VI-40, DK-40 board)

Mode	VIDEO Input
Signal	Color bar (S-VIDEO IN)
Measuring point	CL407, 408
Measuring equipment	Oscilloscope
Adjustment parts	RV106, 405
Specification value	CL407 (R-Y) 1.05 ± 0.01 Vp-p CL408 (B-Y) 1.20 ± 0.01 Vp-p

Adjustment Procedure:

(1) Connect on oscilloscope to the CL408.
(2) Adjust RV106 so that the Ⓐ level (B-Y) of waveform on the oscilloscope satisfies the specification value.

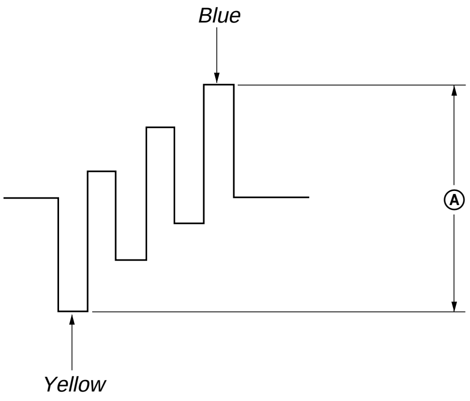

Fig. 4-10

(3) Connect on oscilloscope to the CL407.
(4) Adjust RV405 so that the Ⓐ level (R-Y) of waveform on the oscilloscope satisfies the specification value.

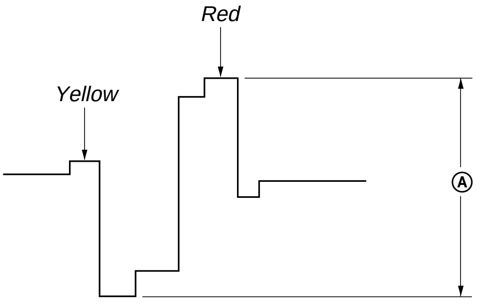

Fig. 4-11

[HUE Level Adjustment] (VI-40 board)

Mode	VIDEO Input
Signal	Color bar (S-VIDEO IN)
Measuring point	J1802 (OUTPUT)
Measuring equipment	Vector scope
Adjustment part	RV105
Specification value	Yellow phase 167 ± 4 deg

Adjustment Procedure:

(1) Connect on vector scope to the J1802.
(2) Press the S1707 (CAPTURE).
(3) Check yellow phase satisfies the specification value.
(4) If NG, press the S1708 (PICTURE) and lights on the D1733 (INPUT)
(5) A little adjust the RV105 and press the S1707.
(6) Repeat steps (2) to (5) until yellow phase satisfies the specification value.

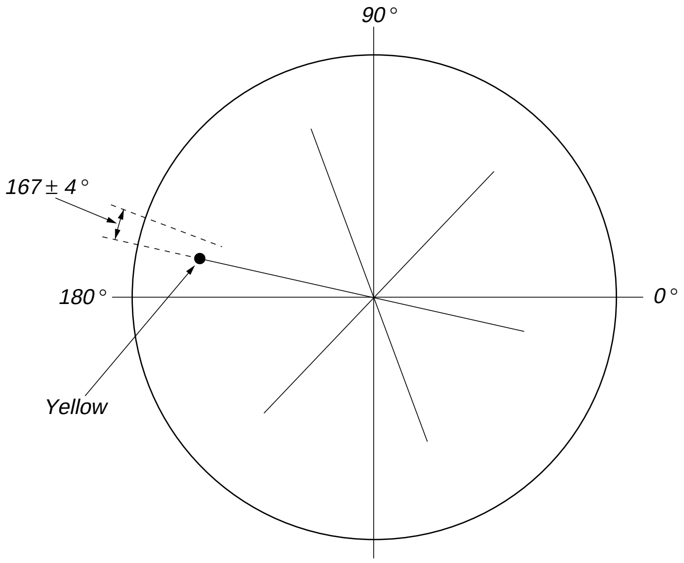

Fig. 4-12

Reference : B-Y Waveform (CL408)

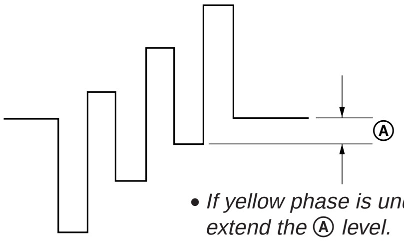

• *If yellow phase is under 163°, extend the Ⓐ level.*
• *If yellow phase is over 171°, shorten the Ⓐ level.*

Fig. 4-13

Adjustment Parts and Measuring Points:

– DK-40 BOARD (Side A) –

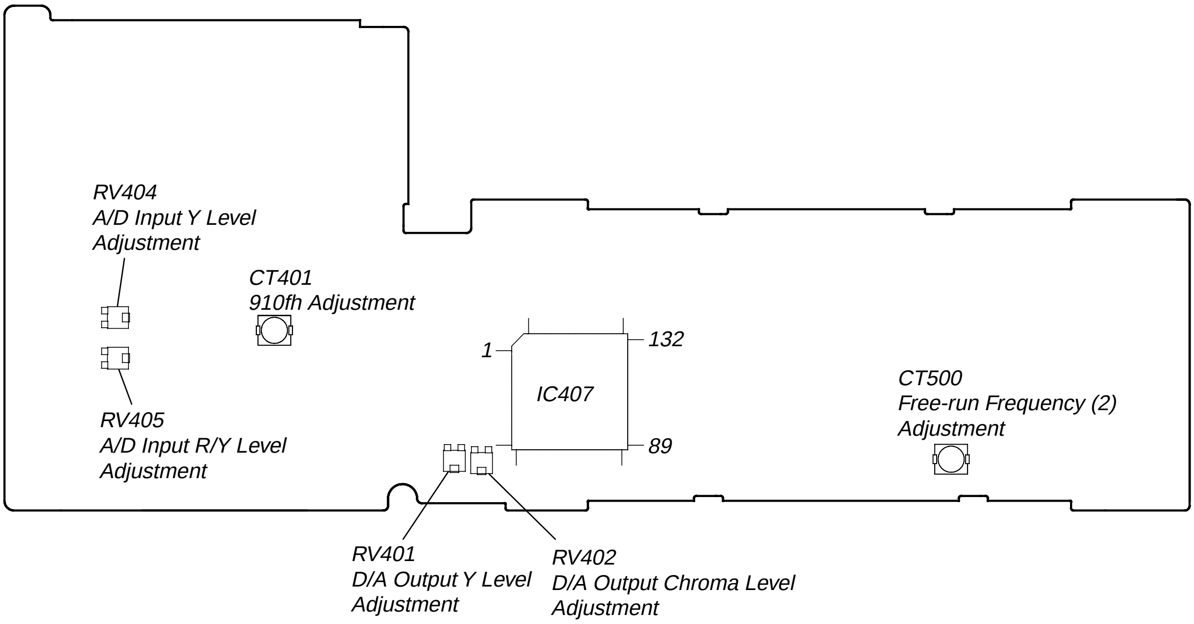

– DK-40 BOARD (Side B) –

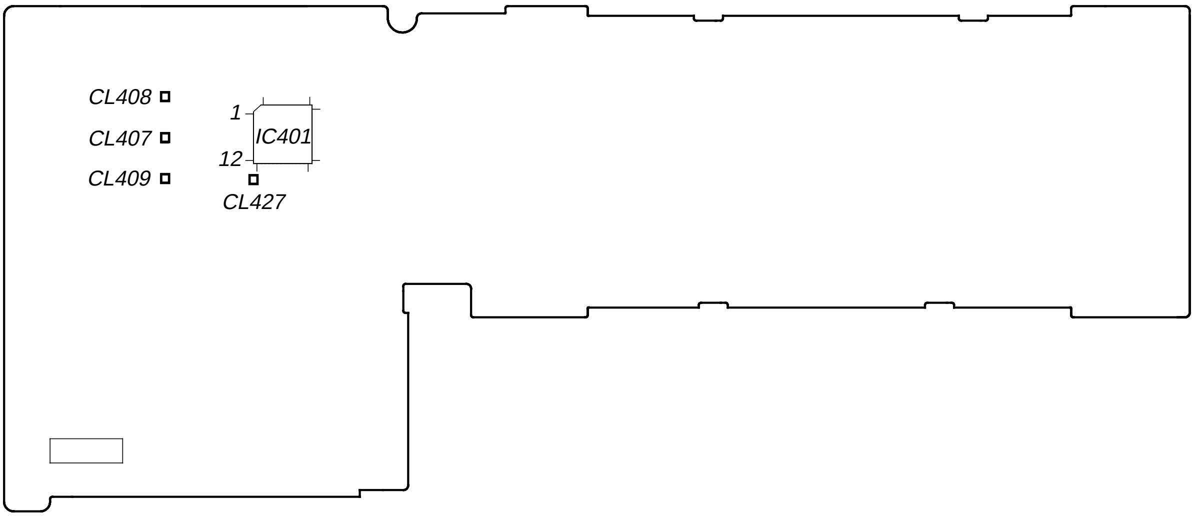

– VI-40 BOARD (Side A) –

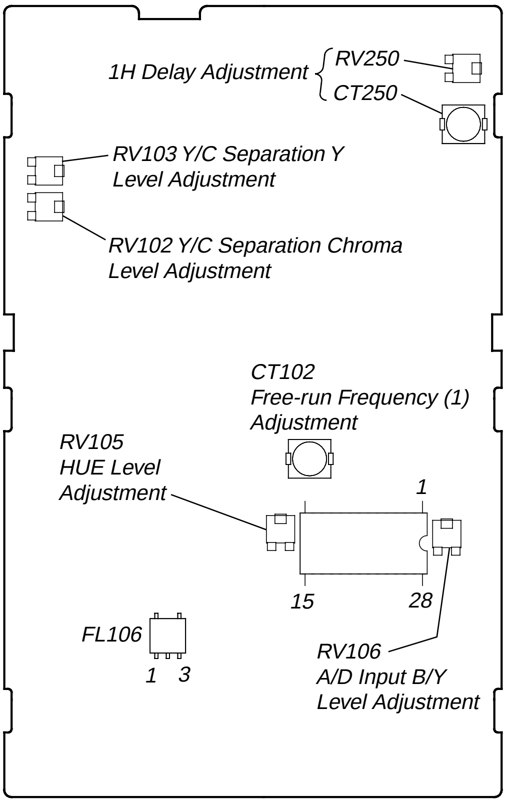

– VI-40 BOARD (Side B) –

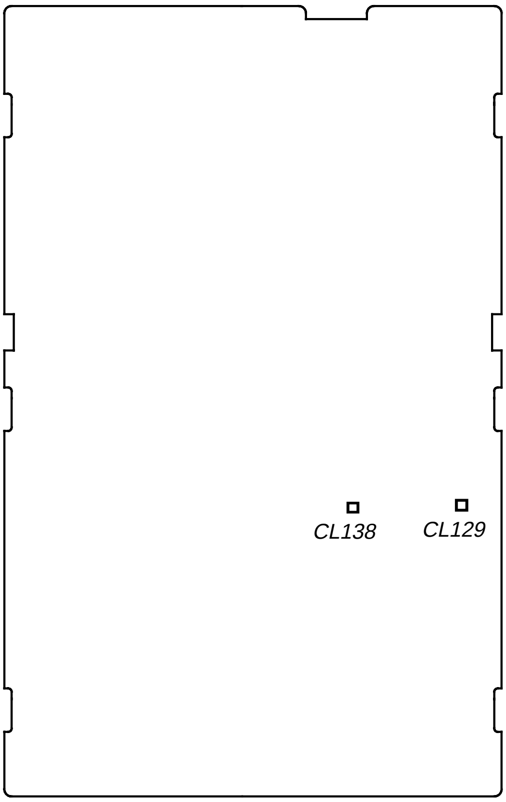

– MD-40 BOARD (Side A) –

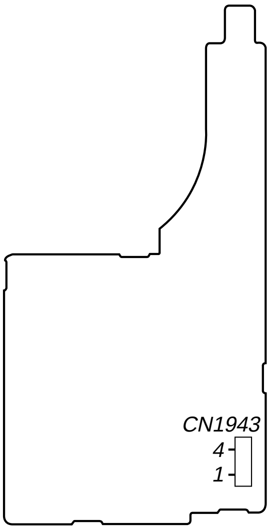

– VS-40 BOARD (Side A) –

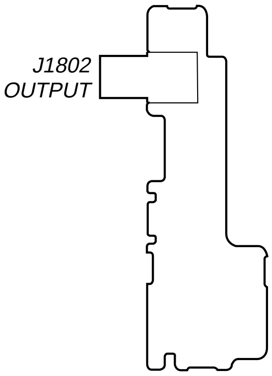

SECTION 5
DIAGRAMS

5-1. BLOCK DIAGRAM – VIDEO Section –

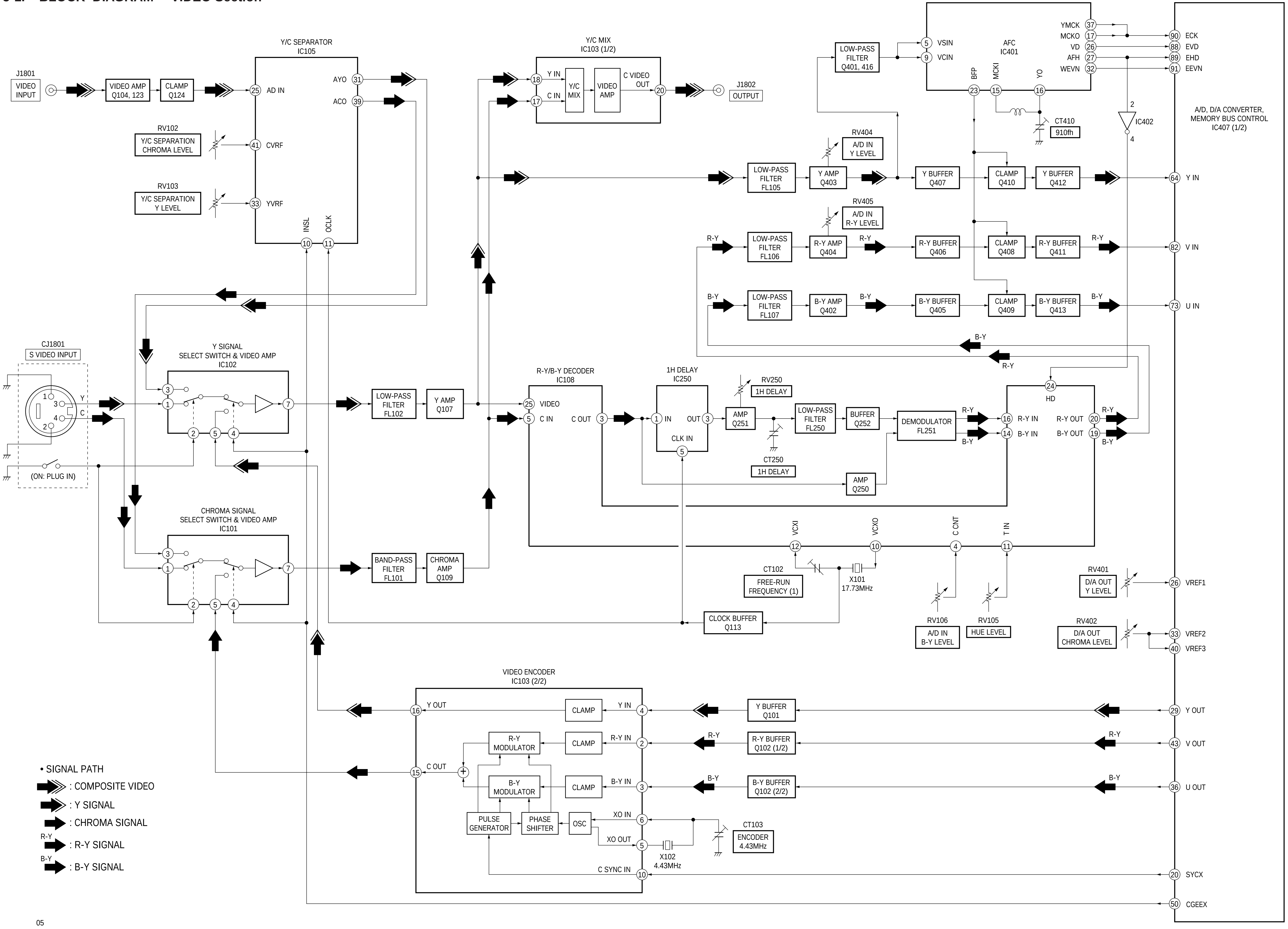

5-2. BLOCK DIAGRAM – MAIN Section –

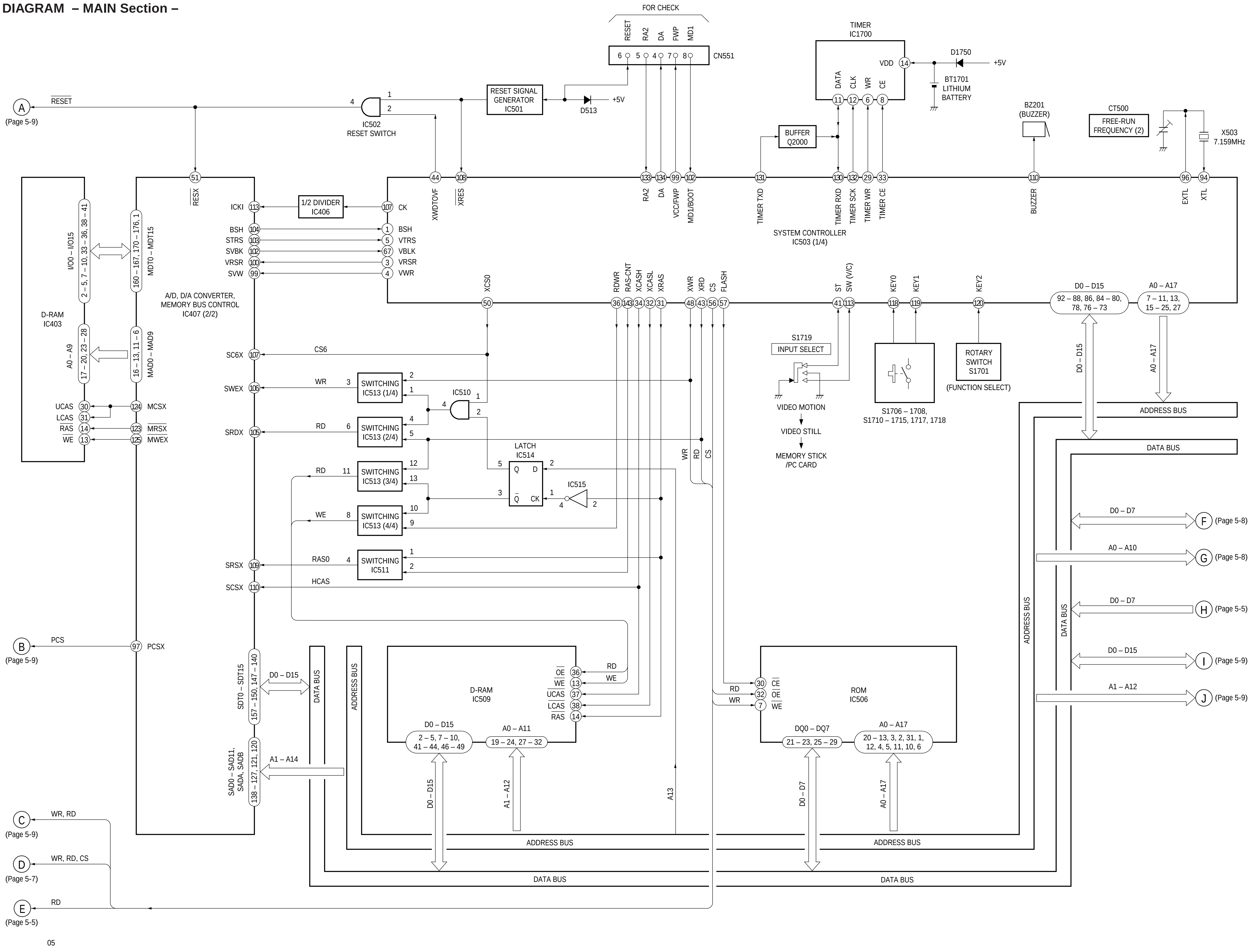

5-3. BLOCK DIAGRAM – CENTRONICS Section –

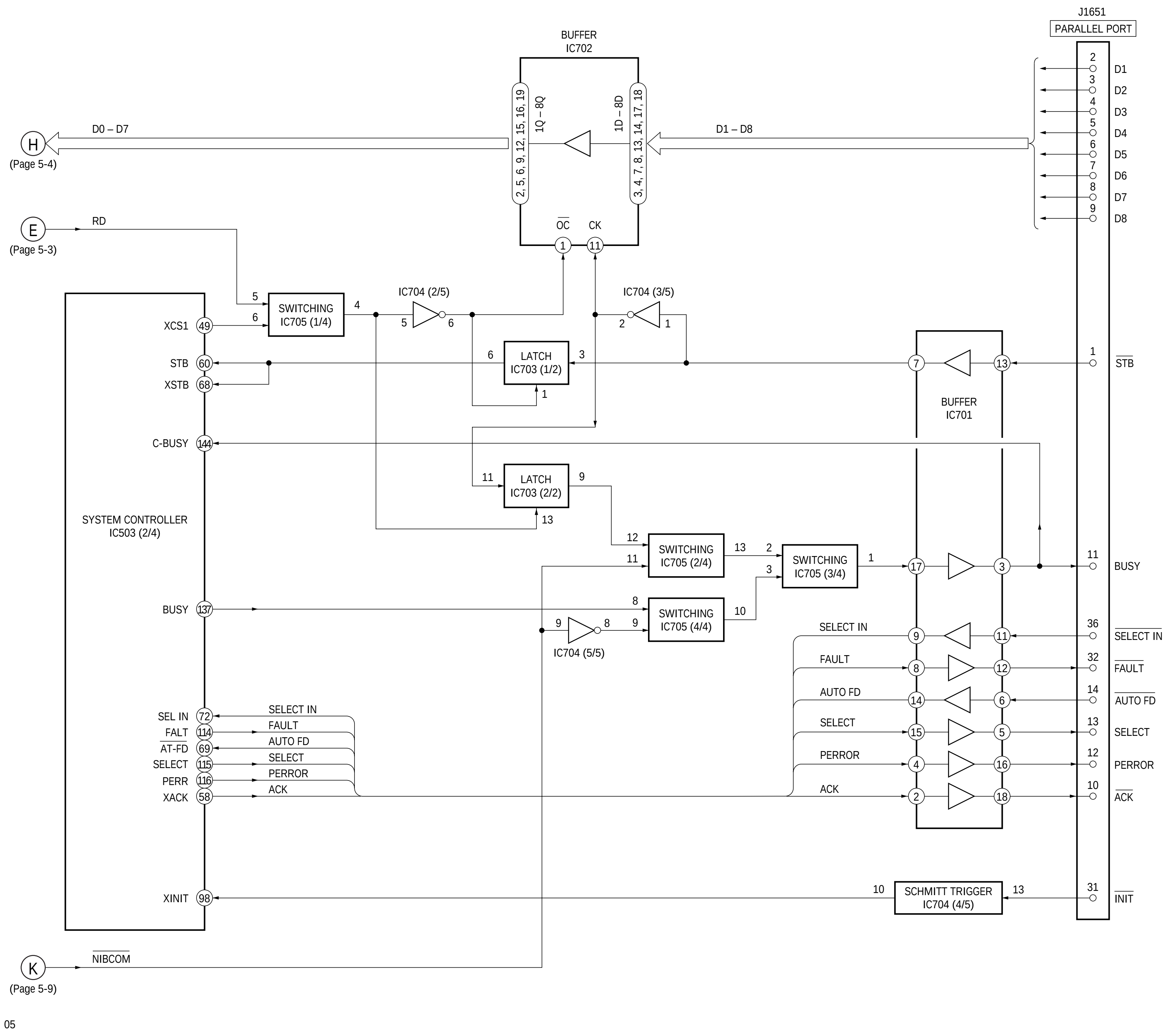

5-4. BLOCK DIAGRAM – PC CARD/MEMORY STICK Section –

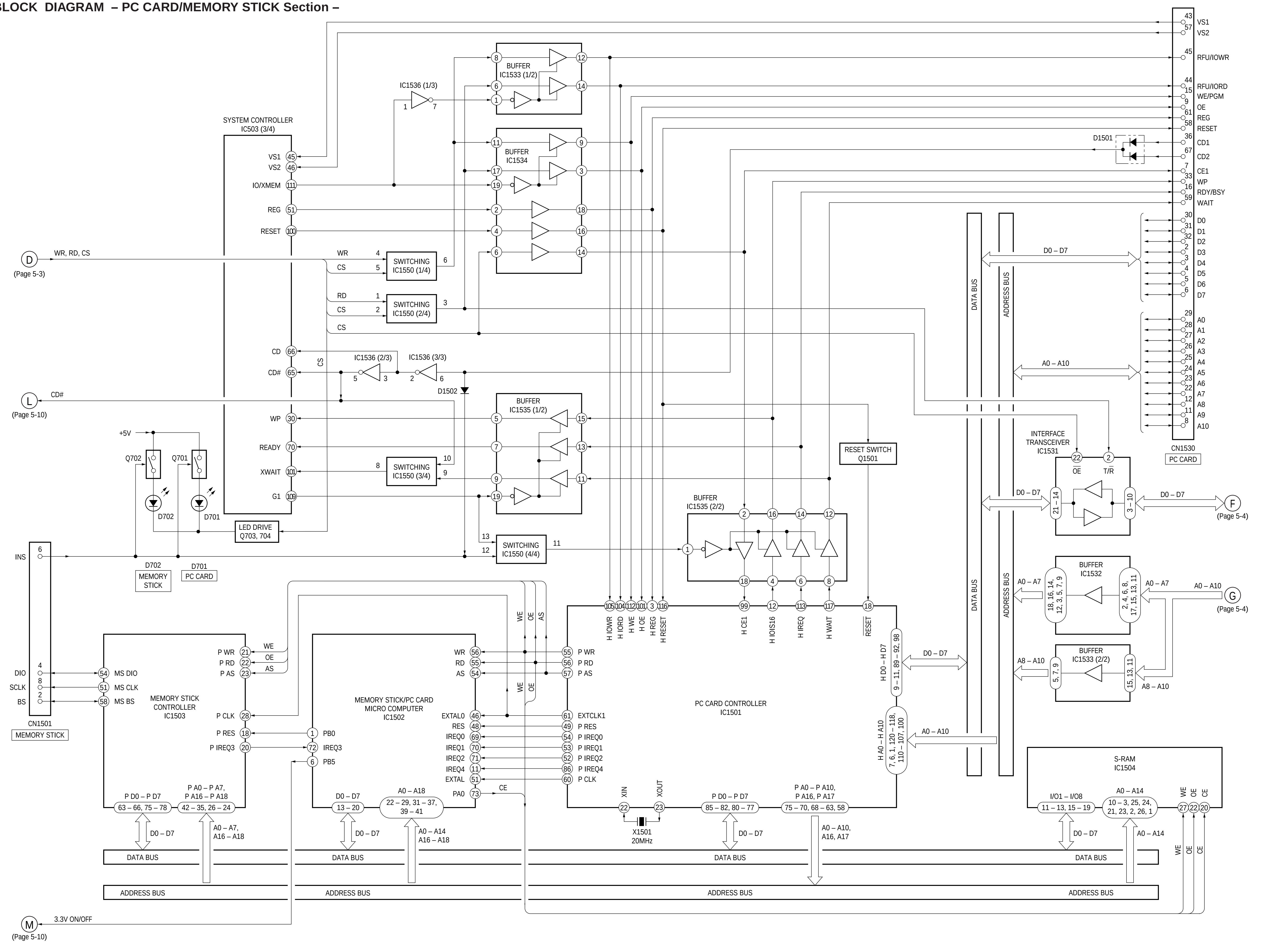

5-5. BLOCK DIAGRAM – HEAD/SENSOR/MOTOR/POWER SUPPLY Section –

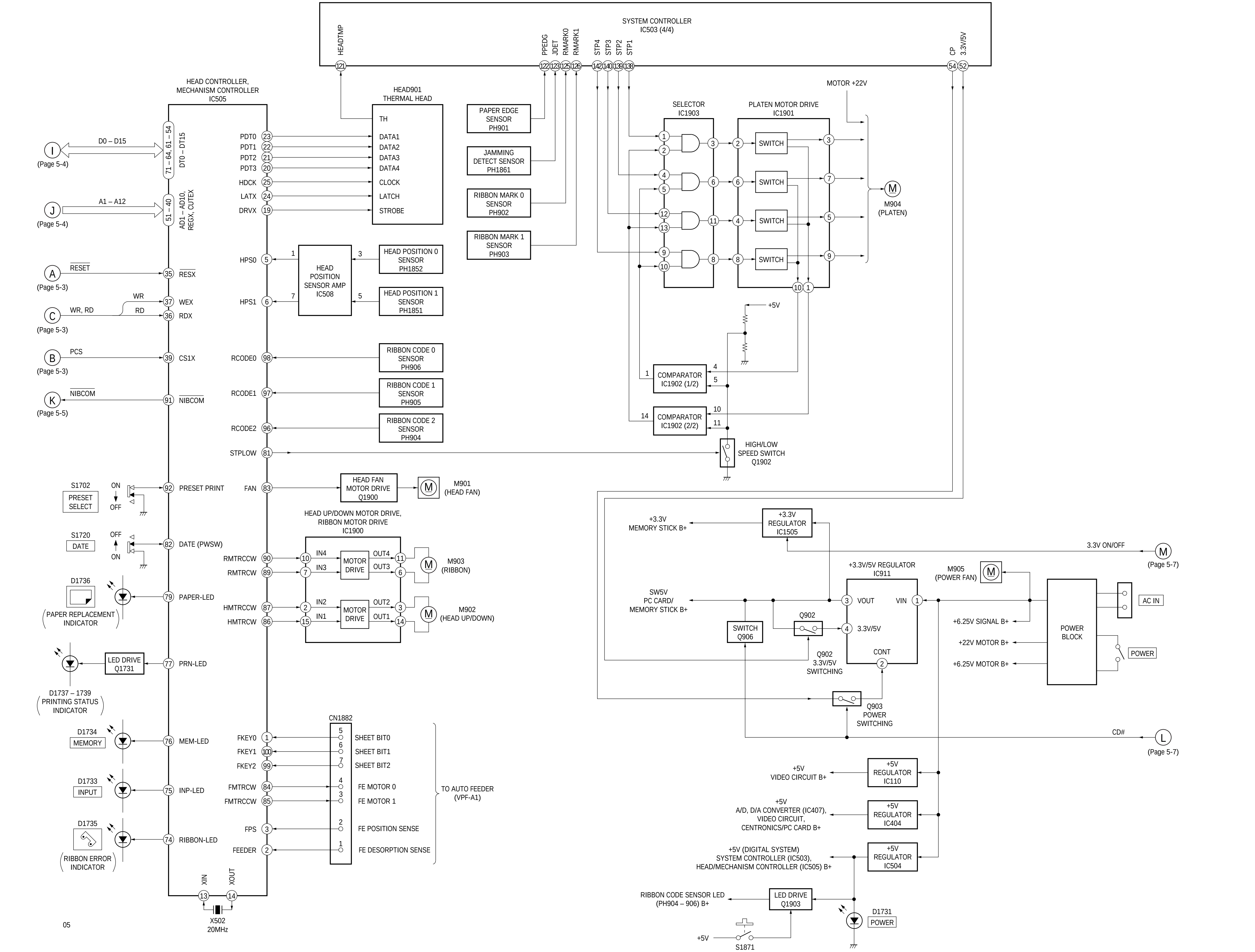

5-6. FRAME SCHEMATIC DIAGRAM

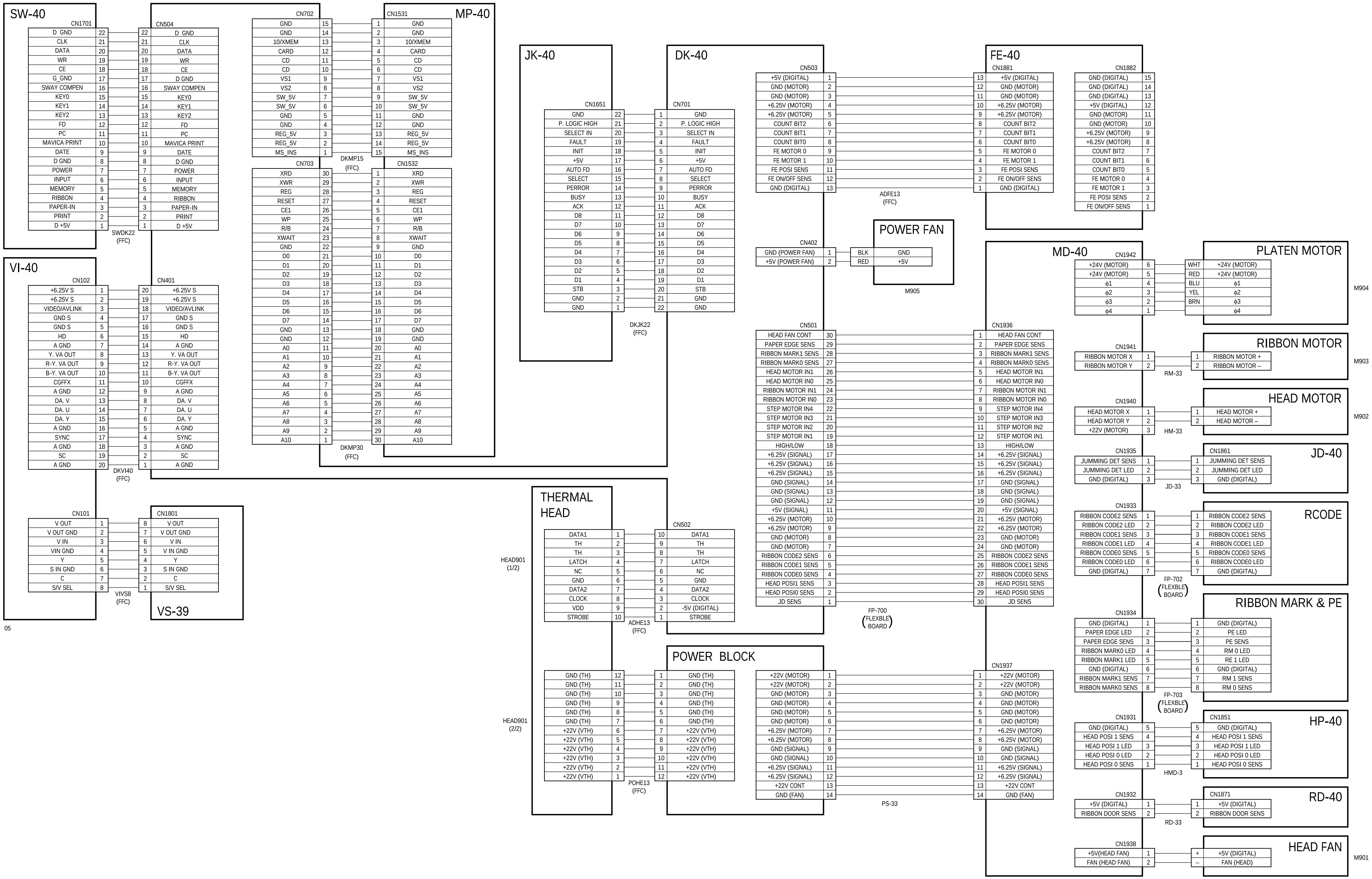

5-7. NOTES FOR PRINTED WIRING BOARD AND SCHEMATIC DIAGRAM

Note on Printed Wiring Board:

- o——— : parts extracted from the component side.
- ——— : parts extracted from the conductor side.
- △ : internal component.
- ░░░ : Pattern from the side which enables seeing.

(The other layers' patterns are not indicated.)

Caution:	
Pattern face side: (Side B)	Parts on the pattern face side seen from the pattern face are indicated.
Parts face side: (Side A)	Parts on the parts face side seen from the parts face are indicated.

Note on Schematic Diagram:

- All capacitors are in μF unless otherwise noted. pF: μμF 50 WV or less are not indicated except for electrolytics and tantalums.
- All resistors are in Ω and $^1/_4$ W or less unless otherwise specified.
- % : indicates tolerance.
- △ : internal component.
- ─[▭]─ : nonflammable resistor.
- ▭ : panel designation.

Note: The components identified by mark ⚠ or dotted line with mark ⚠ are critical for safety.
Replace only with part number specified.

- B+ : B+ Line.
- ▭ : adjustment for repair.
- Voltages and waveforms are dc with respect to ground in color-bar signal input.
  no mark : Color-bar signal input
  ( ) : MEMORY STICK insert
- Voltages are taken with a VOM (Input impedance 10 MΩ). Voltage variations may be noted due to normal production tolerances.
- Waveforms are taken with a oscilloscope. Voltage variations may be noted due to normal production tolerances.
- Circled numbers refer to waveforms.
- Signal path.
  ⇨⋙ : COMPOSITE VIDEO
  ⇨≫ : Y SIGNAL
  ⇨▷ : CHROMA SIGNAL
  R-Y ⇨▷ : R-Y SIGNAL
  B-Y ⇨▷ : B-Y SIGNAL

- **Circuit Boards Location**

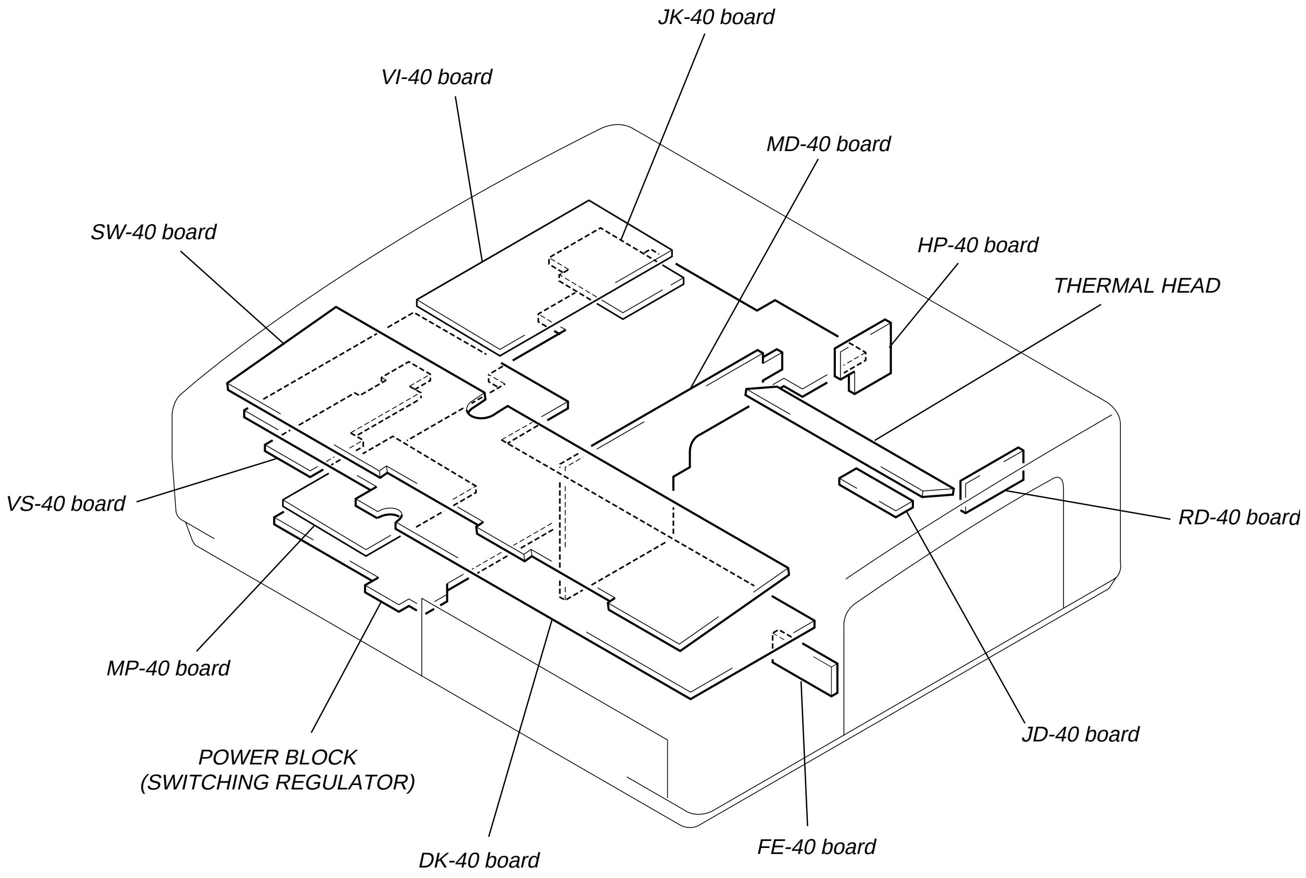

5-8. PRINTED WIRING BOARD – VS-40 Board –

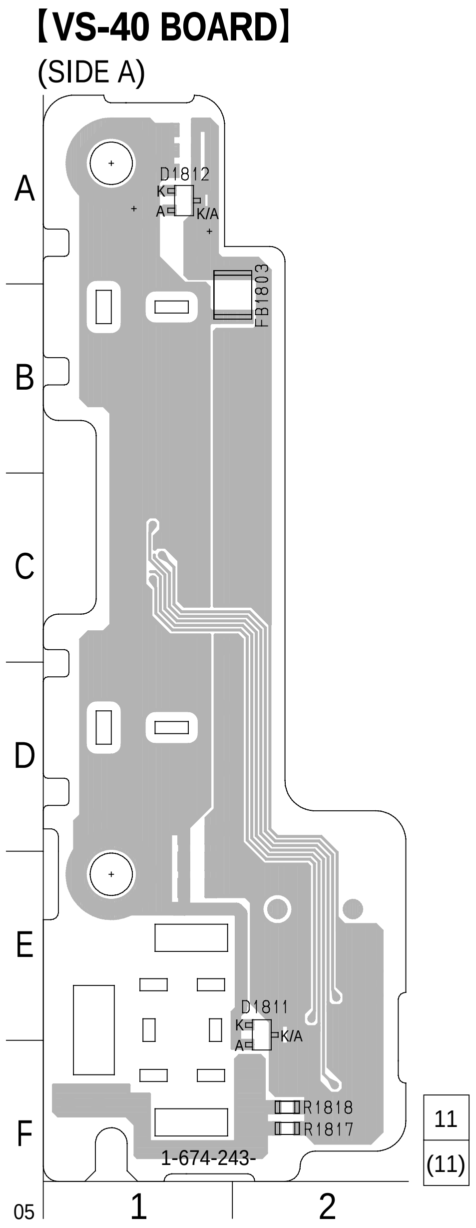

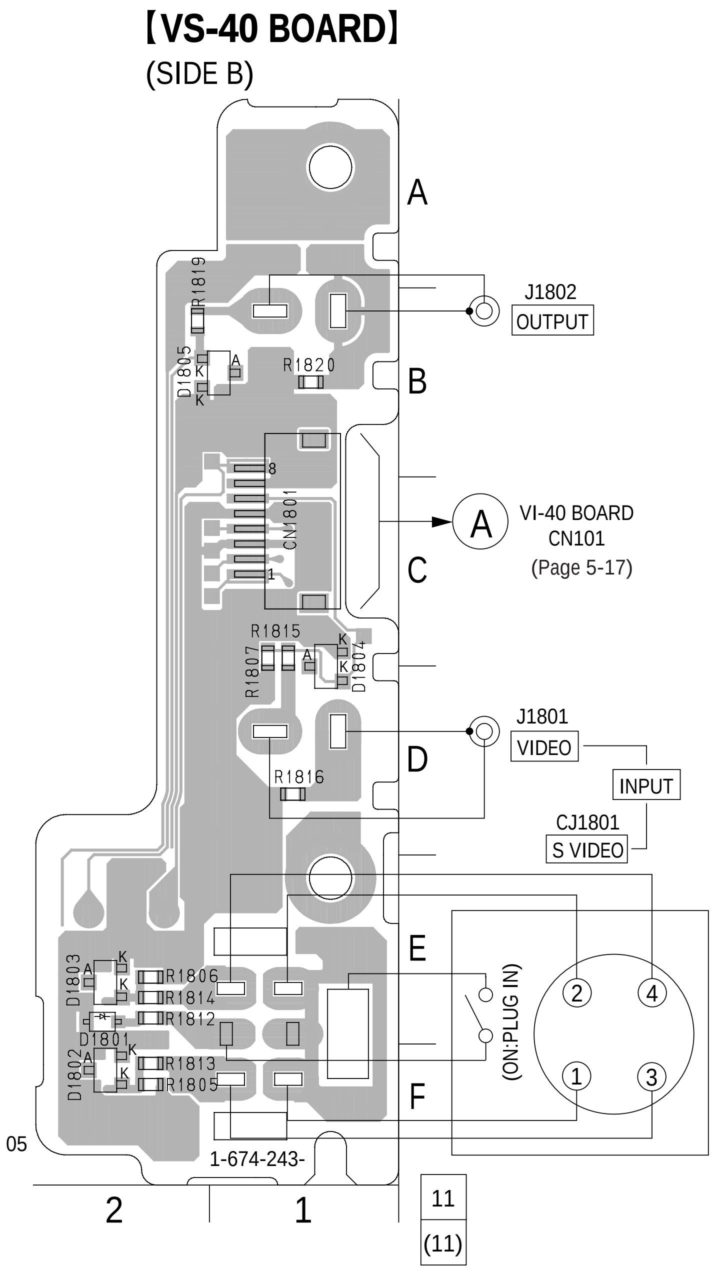

- **Semiconductor Location (Side A)**

Ref. No.	Location
D1811	E-2
D1812	A-1

- **Semiconductor Location (Side B)**

Ref. No.	Location
D1801	E-2
D1802	F-2
D1803	E-2
D1804	C-1
D1805	B-1

5-9. SCHEMATIC DIAGRAM – VS-40 Board –

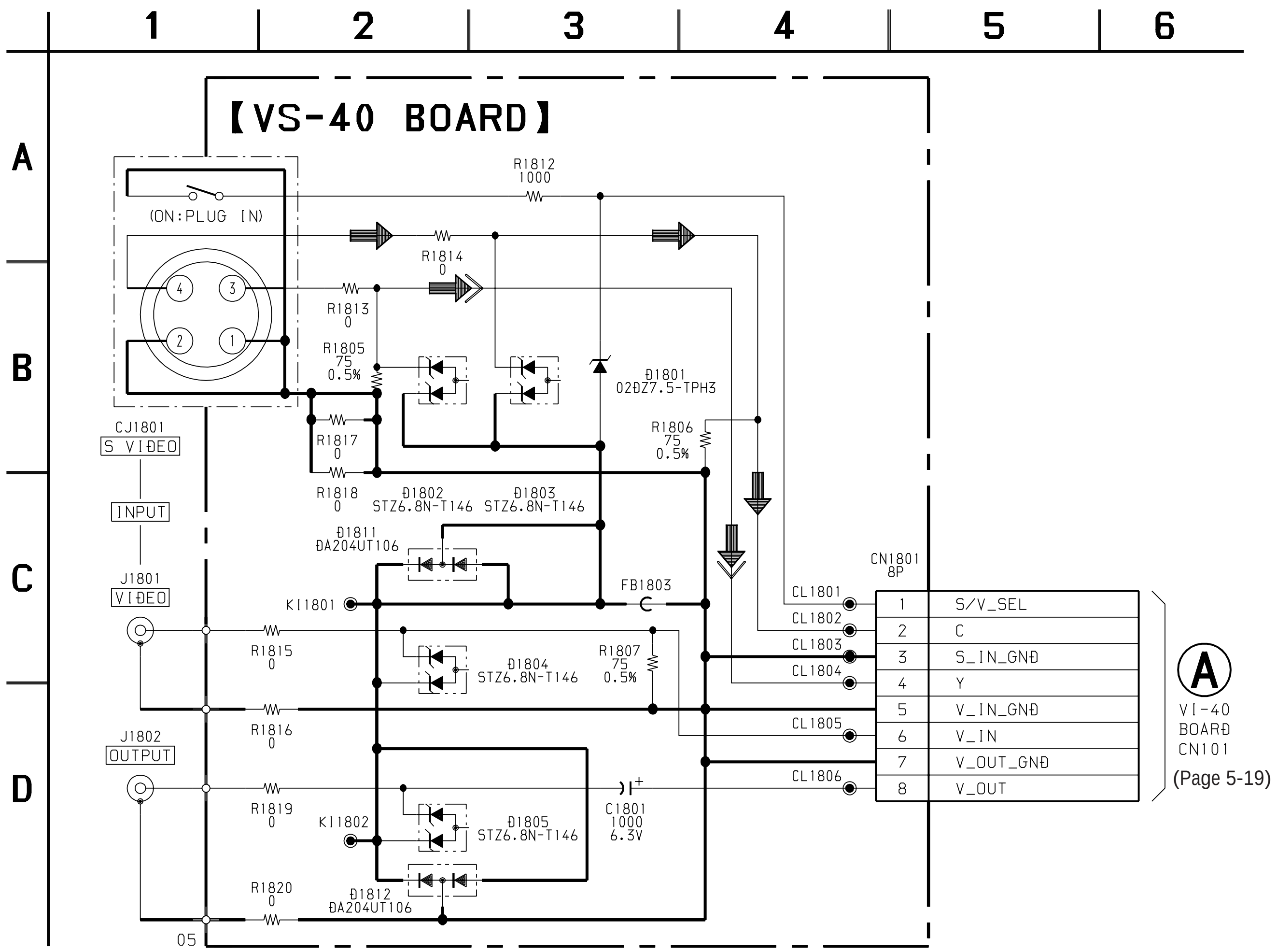

5-10. PRINTED WIRING BOARD – VI-40 Board – • See page 5-14 for Circuit Boards Location.

【VI-40 BOARD】(SIDE A)

- **Semiconductor Location (Side A)**

Ref. No.	Location
IC101	E-1
IC102	E-2
IC103	D-5
IC105	B-2
IC108	F-4
IC110	H-5
IC250	B-5
Q251	A-5
Q252	B-5

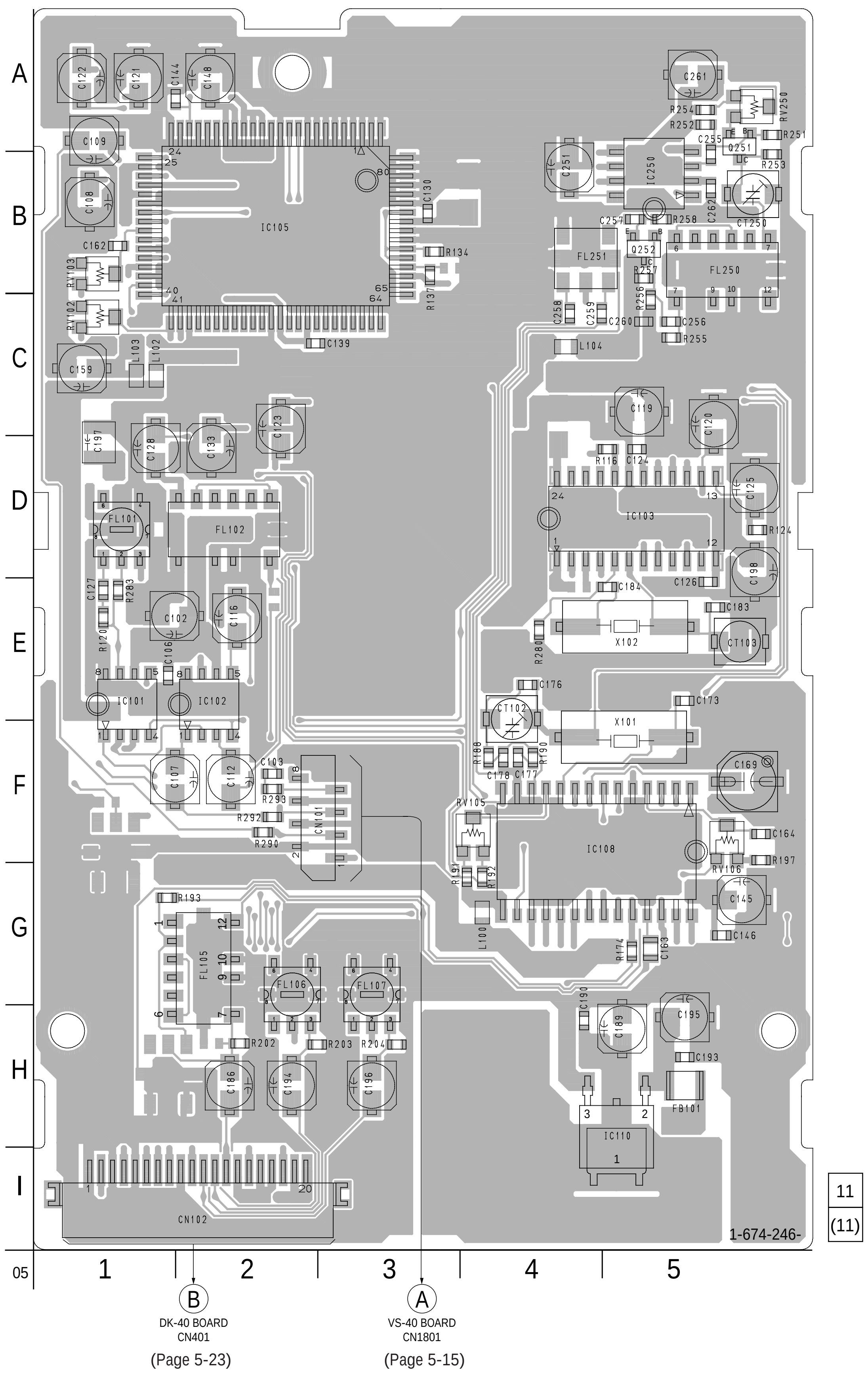

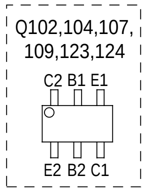

【VI-40 BOARD】(SIDE B)

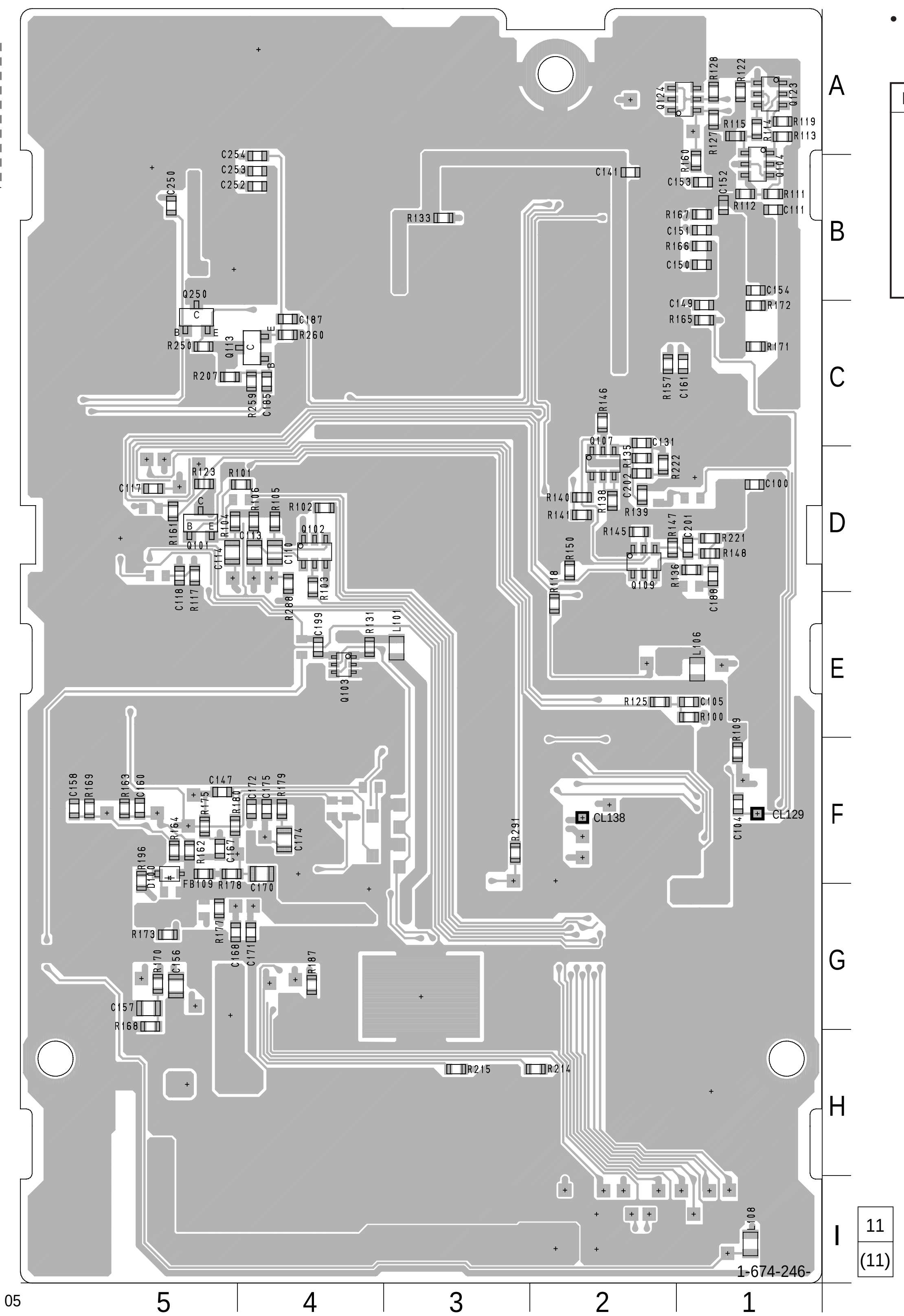

- **Semiconductor Location (Side B)**

Ref. No.	Location
Q101	D-5
Q102	D-4
Q104	B-1
Q107	D-2
Q109	D-2
Q113	C-4
Q123	A-1
Q124	A-1
Q250	C-5

5-11. SCHEMATIC DIAGRAM – VI-40 Board – • See page 5-52 for Waveforms. • See page 5-55 for IC Block Diagrams.

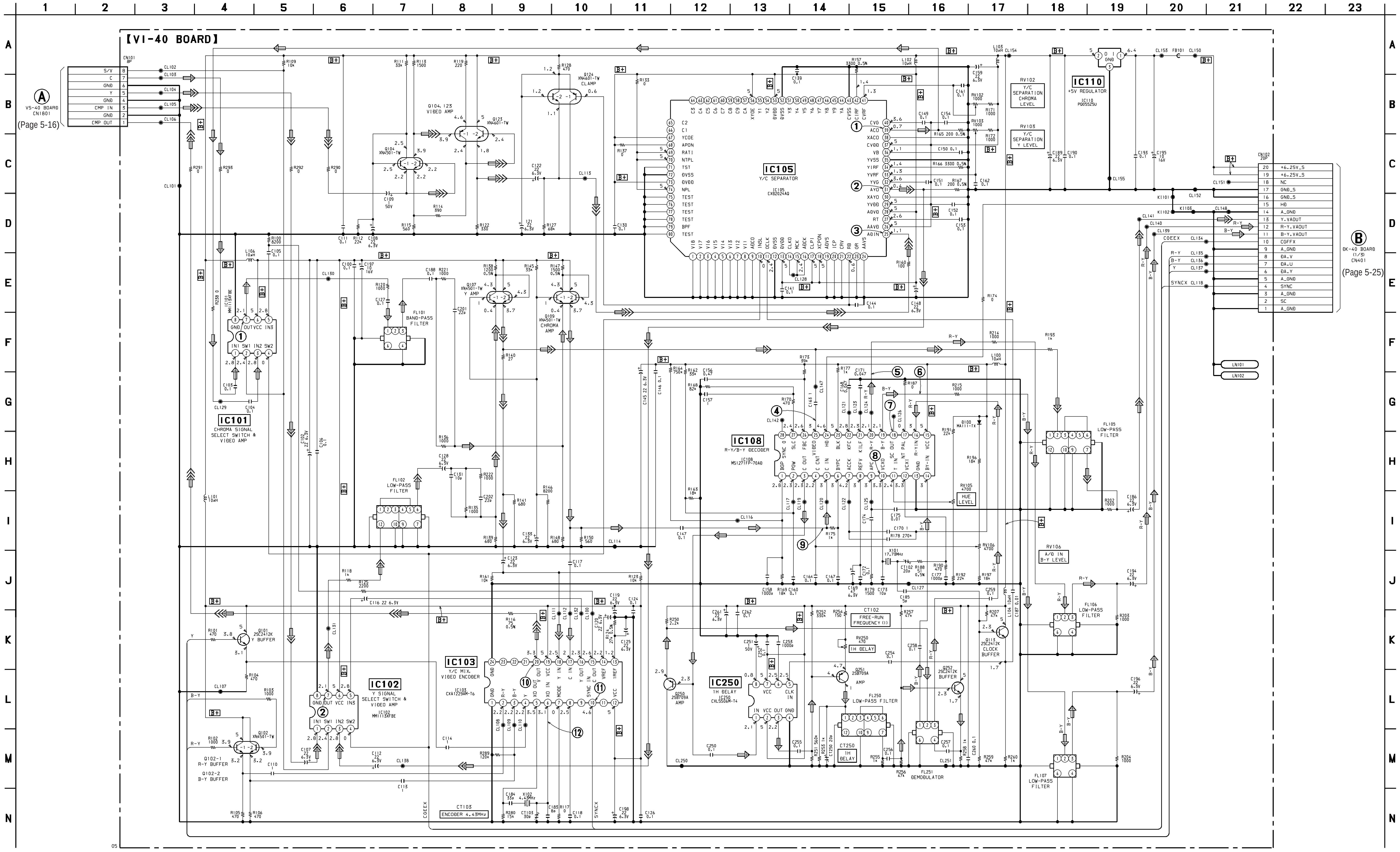

5-12. PRINTED WIRING BOARD – DK-40 Board – • See page 5-14 for Circuit Boards Location.

• **Semiconductor Location (Side A)**

Ref. No.	Location
D400	F-7
D401	G-6
D402	F-5
D601	E-19
D696	F-19
D697	F-19
D701	H-1
D702	H-6
IC402	F-6
IC403	F-8
IC404	E-2
IC407	G-10
IC501	G-19
IC502	E-17
IC503	F-15
IC504	E-10
IC509	G-12
IC510	E-15
IC513	E-15
IC514	E-14
IC701	C-5
IC702	C-4
IC703	D-3
IC704	D-4
IC705	D-5
IC911	C-2
Q701	H-1
Q702	H-5
Q703	H-6
Q704	H-6
Q903	B-2
Q2000	E-17

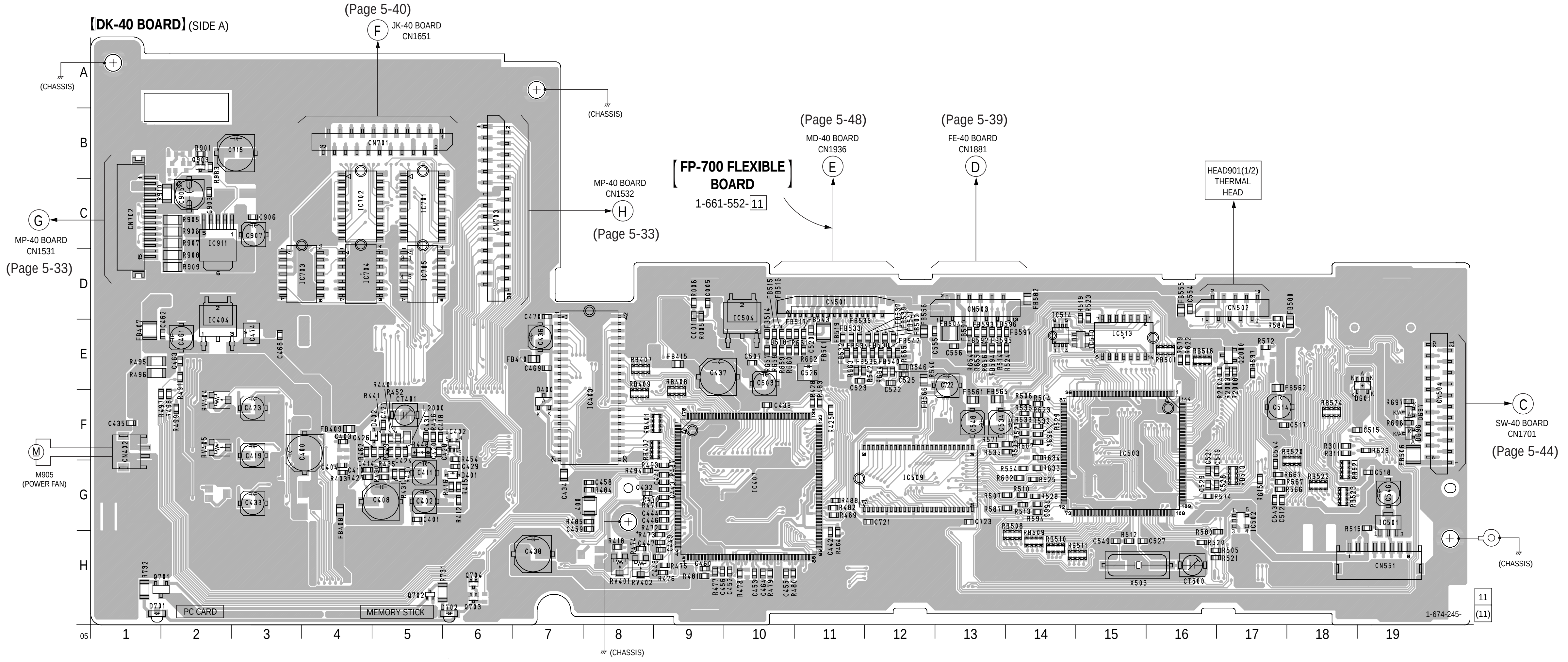

• **Semiconductor Location (Side B)**

Ref. No.	Location
D513	B-19
D603	B-19
D604	C-19
D710	F-4
IC401	C-5
IC406	B-10
IC505	C-18
IC506	C-15
IC508	E-10
IC511	D-14
IC515	D-14
Q401	C-4
Q402	B-2
Q403	D-2
Q404	C-2
Q405	B-2
Q406	C-2
Q407	D-2
Q408	C-3
Q409	B-3
Q410	D-3
Q411	C-3
Q412	D-3
Q413	B-3
Q416	C-4
Q902	F-2
Q906	F-2

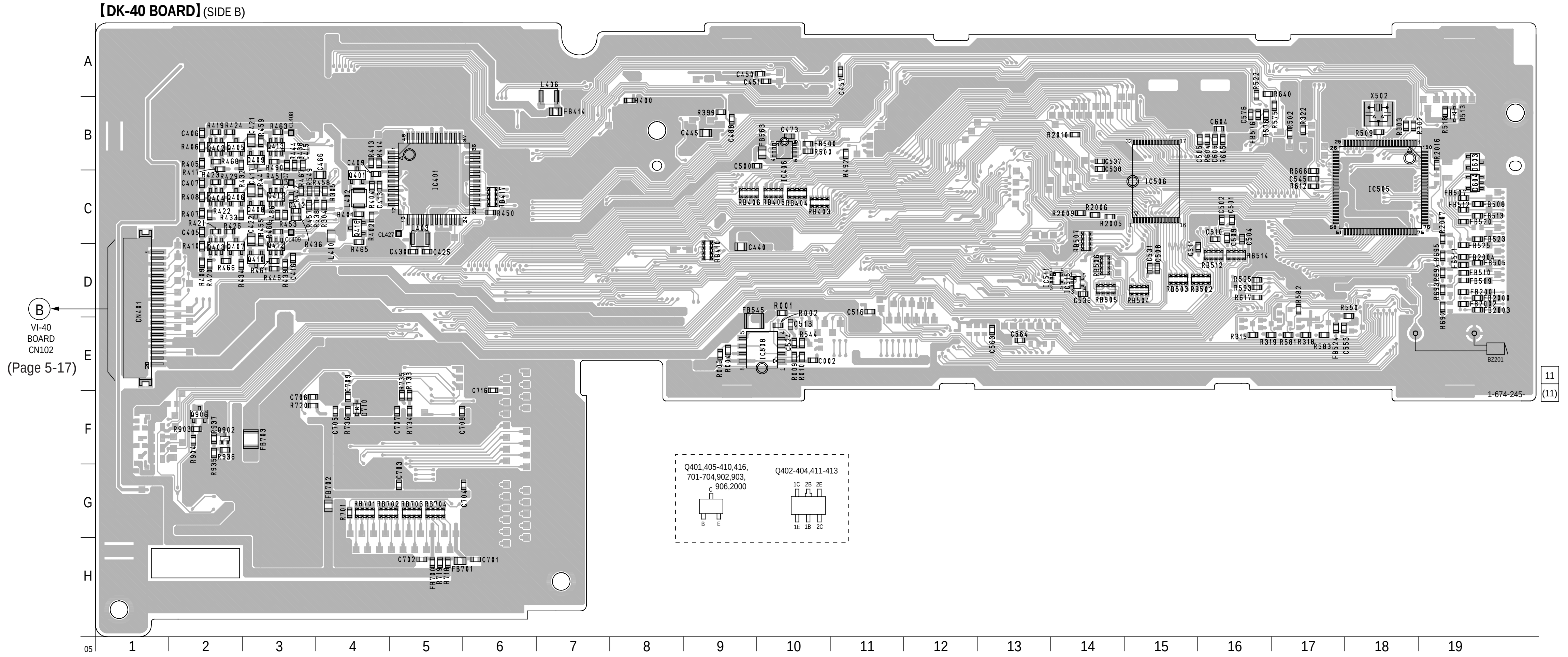

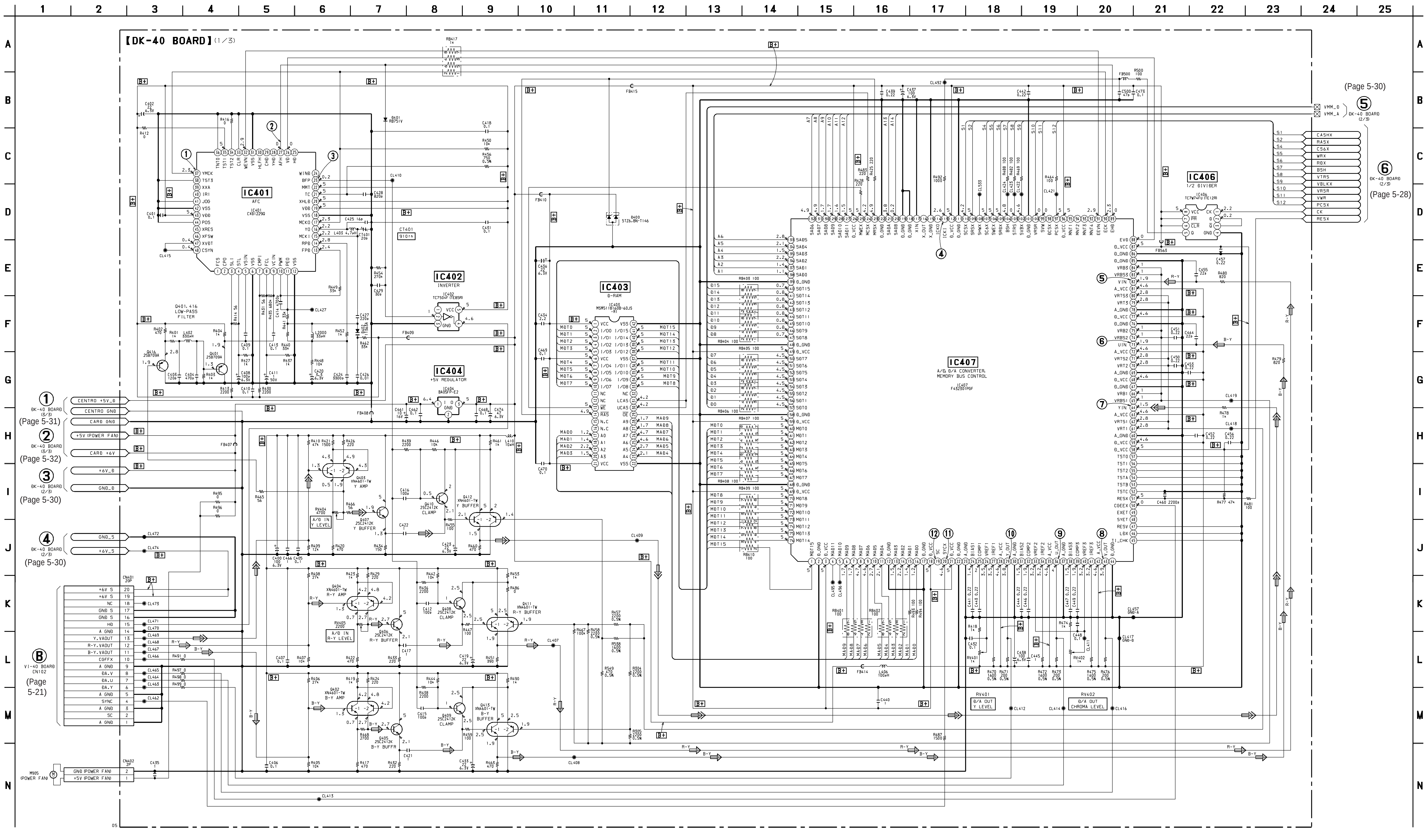
【DK-40 BOARD】(1/3)
IC401
AFC
IC402
INVERTER
IC403
D-RAM
IC404
+5V REGULATOR
IC406
1/2 DIVIDER
IC407
A/D D/A CONVERTER
MEMORY BUS CONTROL
DK-40 BOARD (5/5) (Page 5-31)
DK-40 BOARD (5/5) (Page 5-32)
DK-40 BOARD (2/3) (Page 5-30)
DK-40 BOARD (2/3) (Page 5-30)
VI-40 BOARD CN102 (Page 5-21)
(Page 5-30)
DK-40 BOARD (2/3)
DK-40 BOARD (2/3) (Page 5-28)
M905 (POWER FAN)
RV401 D/A OUT Y LEVEL
RV402 D/A OUT CHROMA LEVEL

5-14. SCHEMATIC DIAGRAM – DK-40 Board (2/3) – • See page 5-53 for Waveforms.

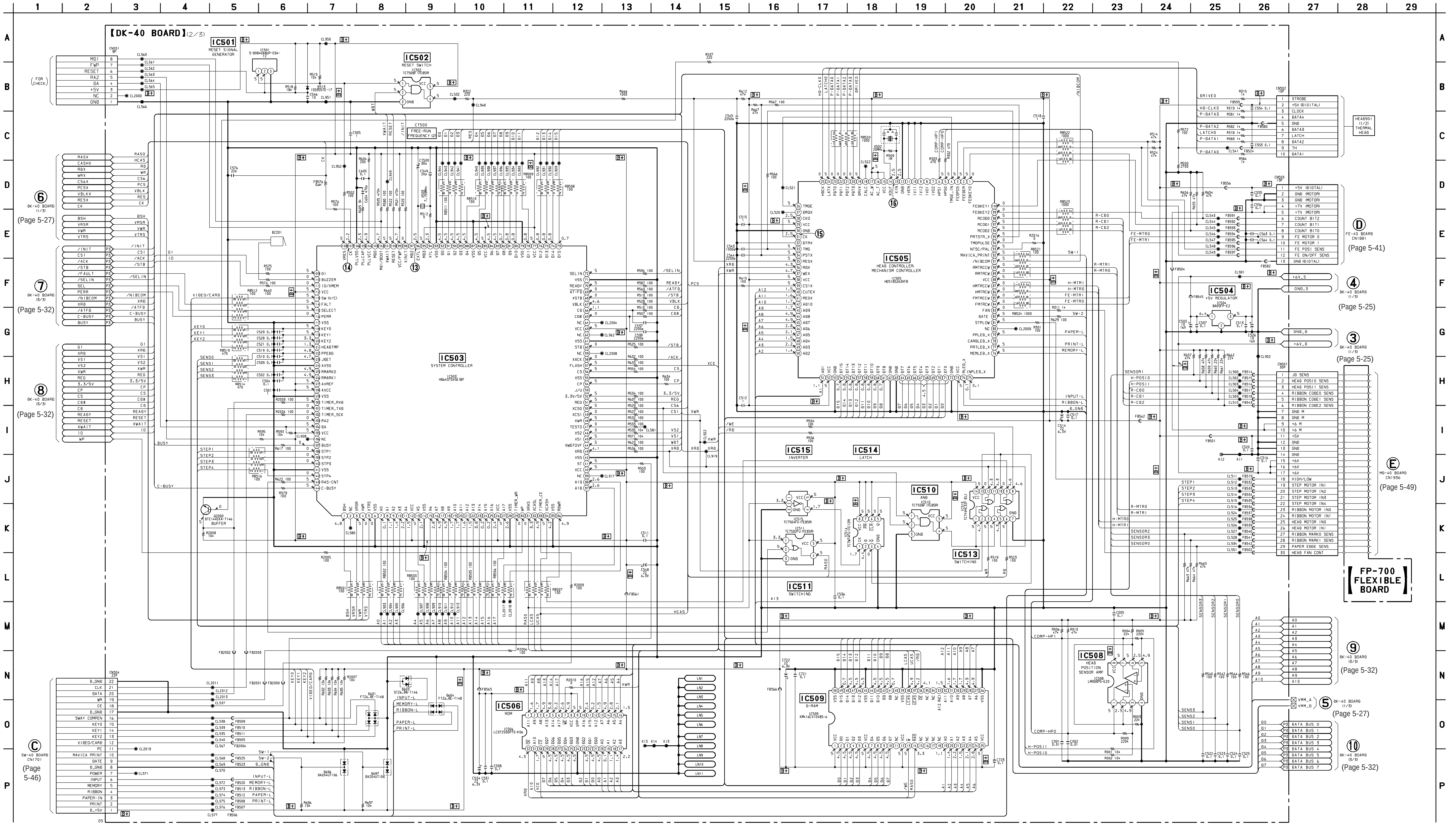

5-15. SCHEMATIC DIAGRAM – DK-40 Board (3/3) – • See page 5-56 for IC Block Diagrams.

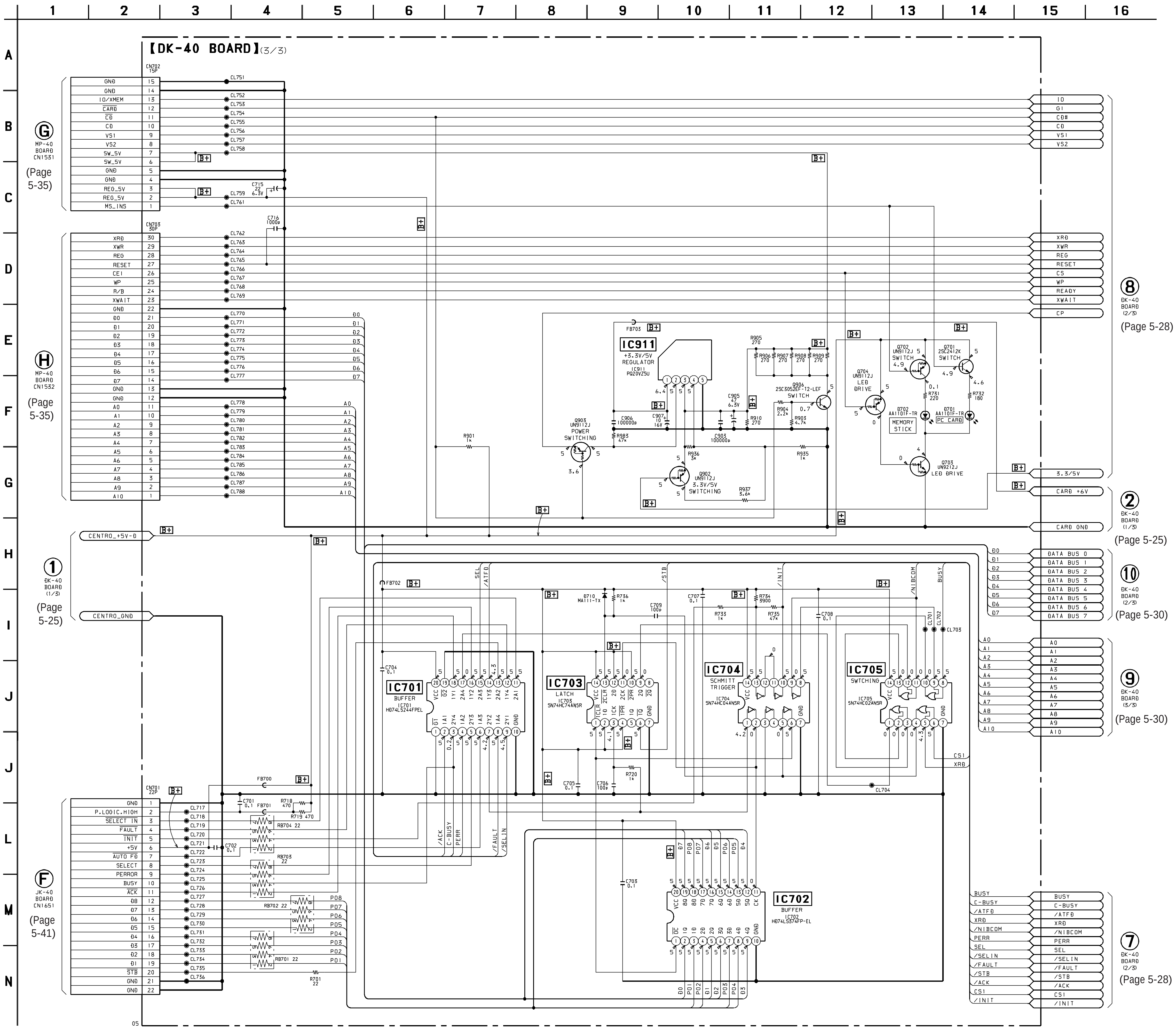

5-16. PRINTED WIRING BOARD – MP-40 Board –

• See page 5-14 for Circuit Boards Location.

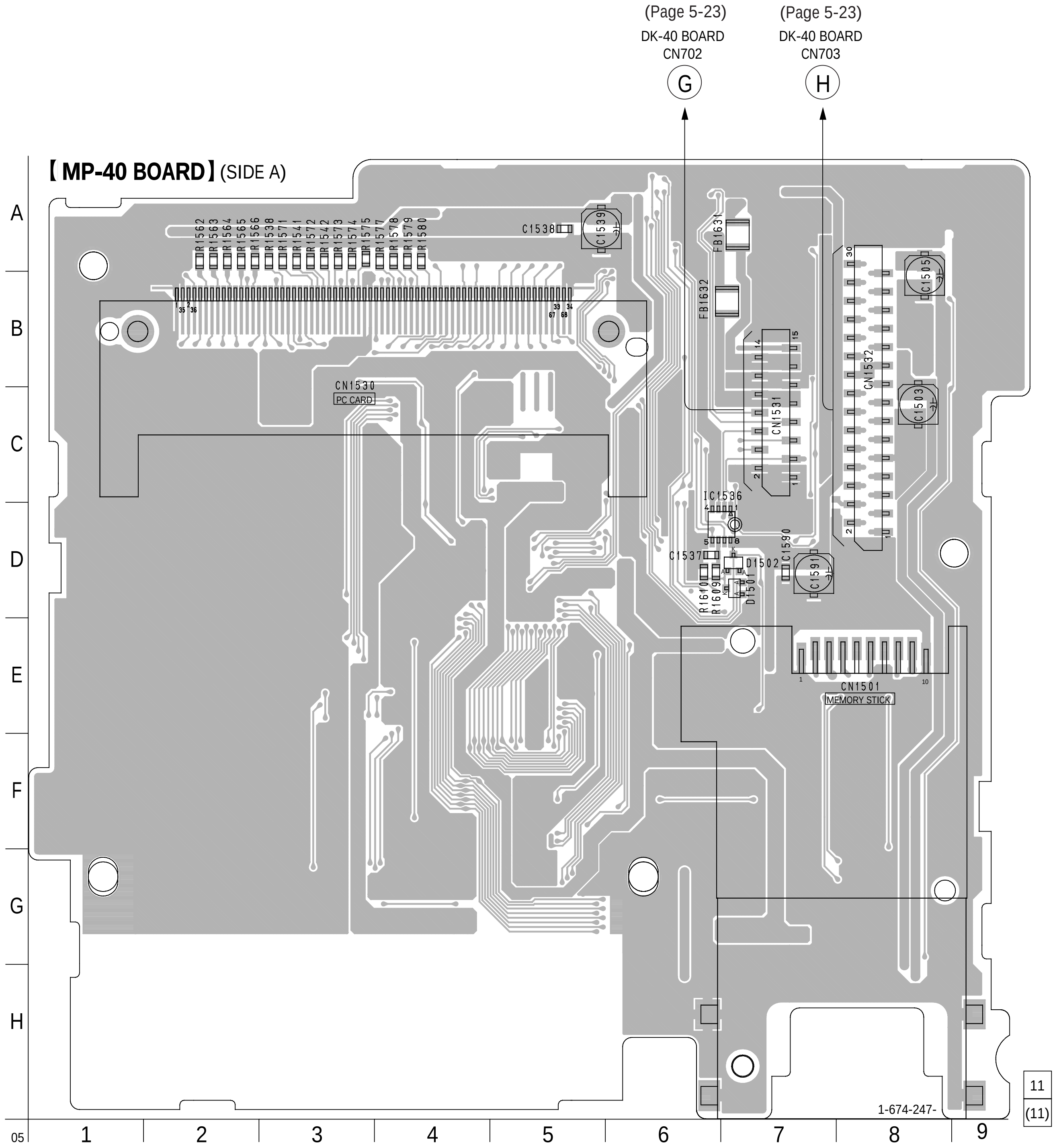

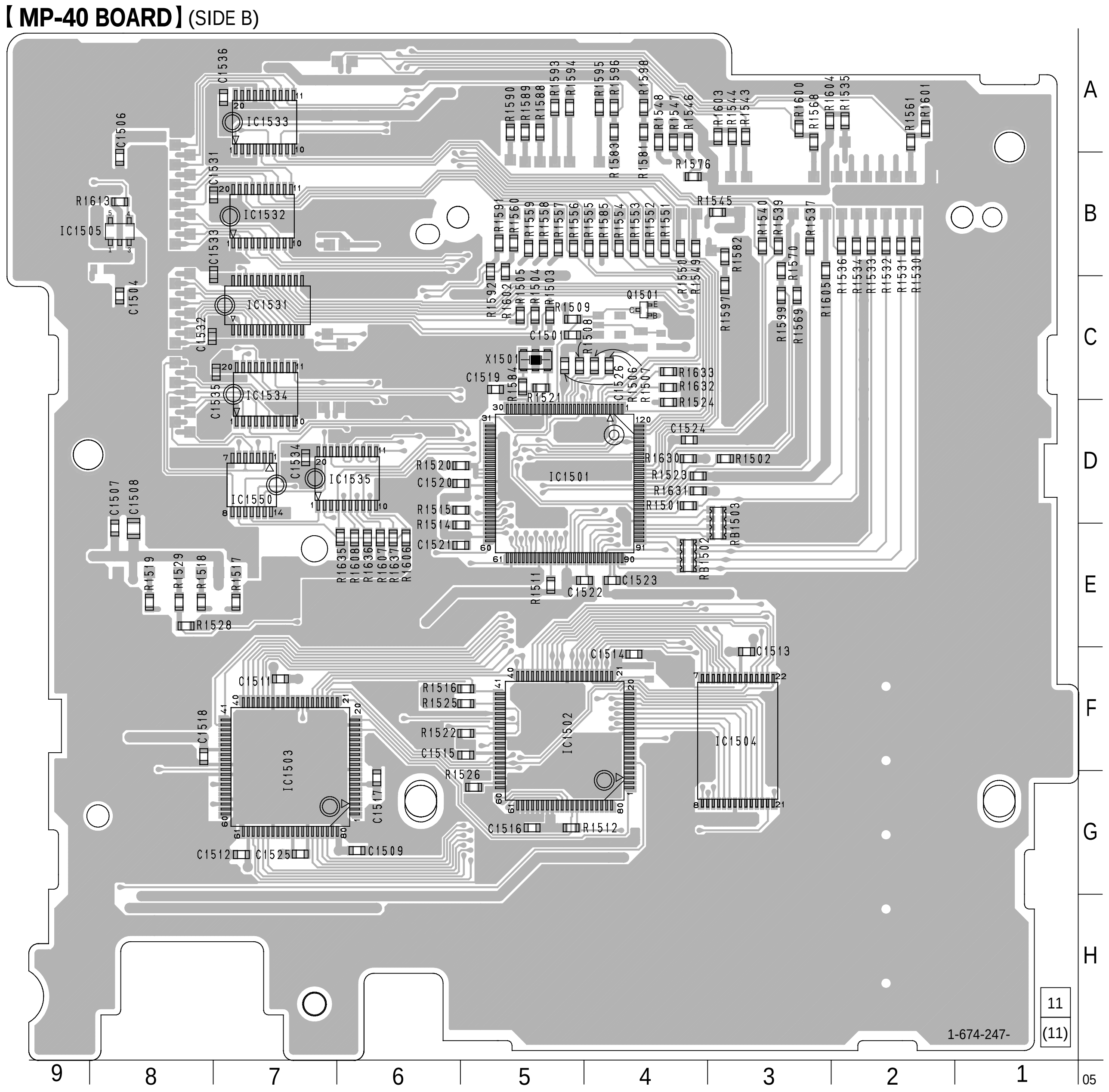

• **Semiconductor Location (Side A)**

Ref. No.	Location
D1501	D-7
D1502	D-7
IC1536	D-7

• **Semiconductor Location (Side B)**

Ref. No.	Location
IC1501	D-5
IC1502	F-5
IC1503	F-7
IC1504	F-3
IC1505	B-8
IC1531	C-7
IC1532	B-7
IC1533	A-7
IC1534	C-7
IC1535	D-6
IC1550	D-7
Q1501	C-4

5-17. SCHEMATIC DIAGRAM – MP-40 Board – • See page 5-54 for Waveforms. • See page 5-57 for IC Block Diagrams.

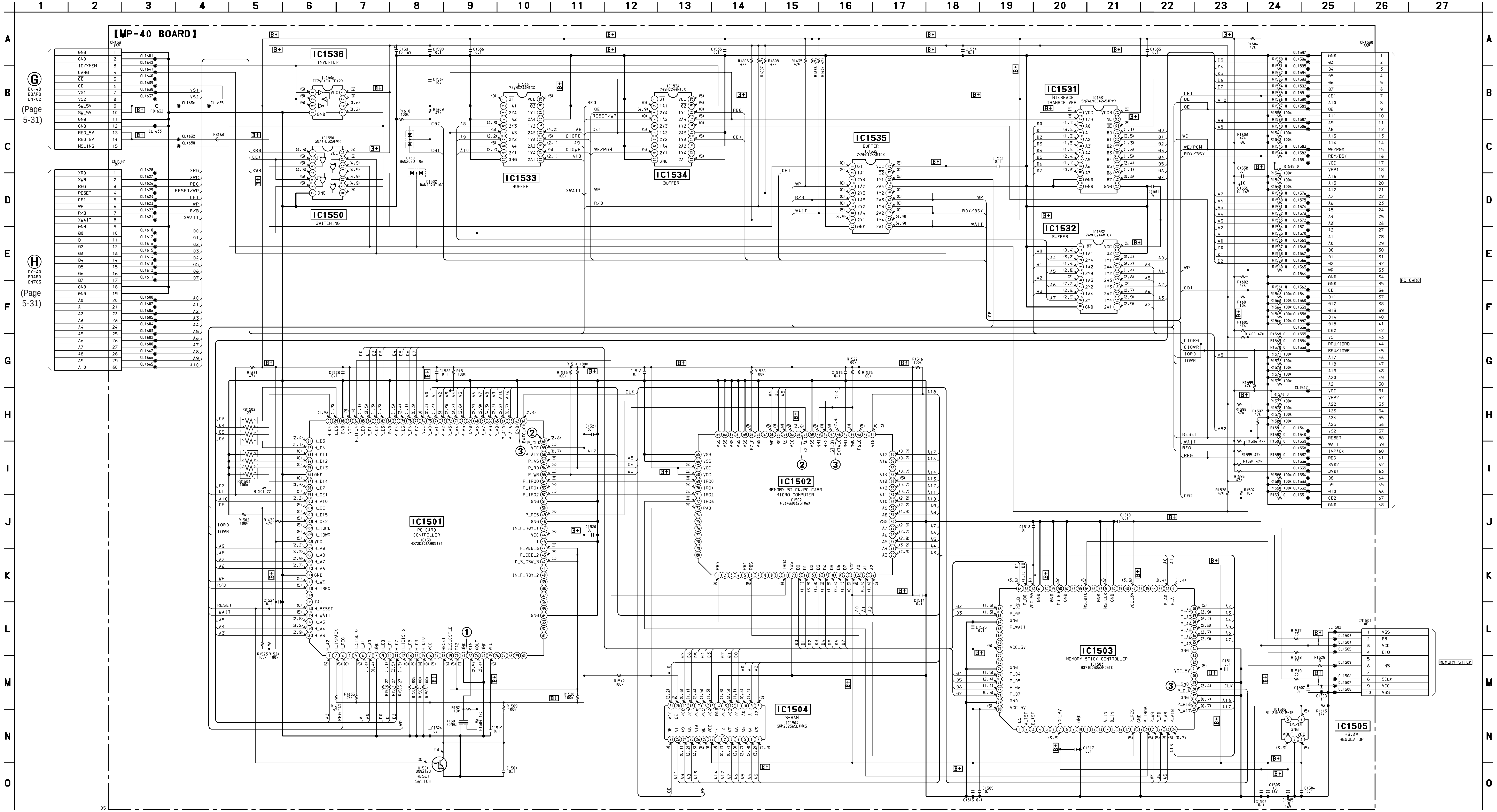

5-18. PRINTED WIRING BOARDS – FE-40/JK-40 Boards –

• See page 5-14 for Circuit Boards Location.

【FE-40 BOARD】(SIDE A)

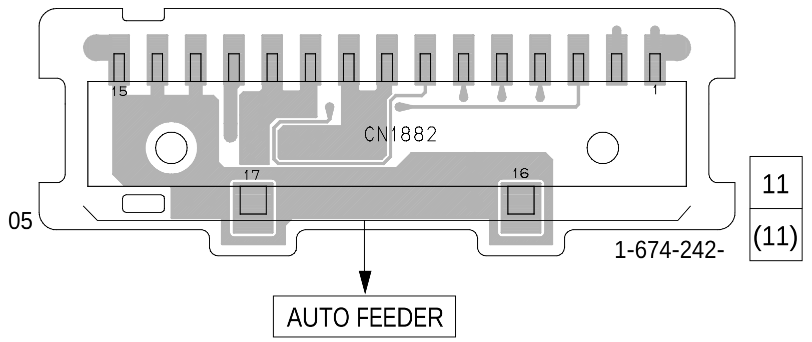

【FE-40 BOARD】(SIDE B)

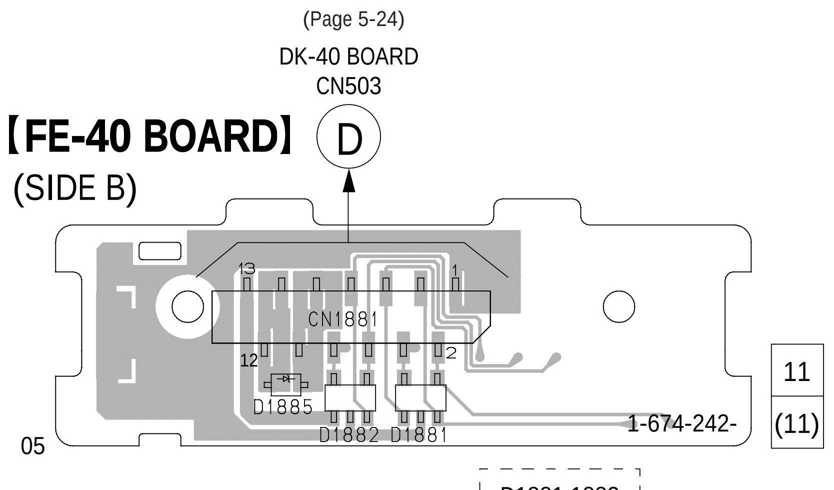

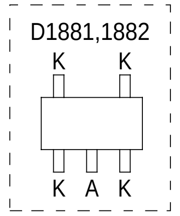

【JK-40 BOARD】(SIDE A)

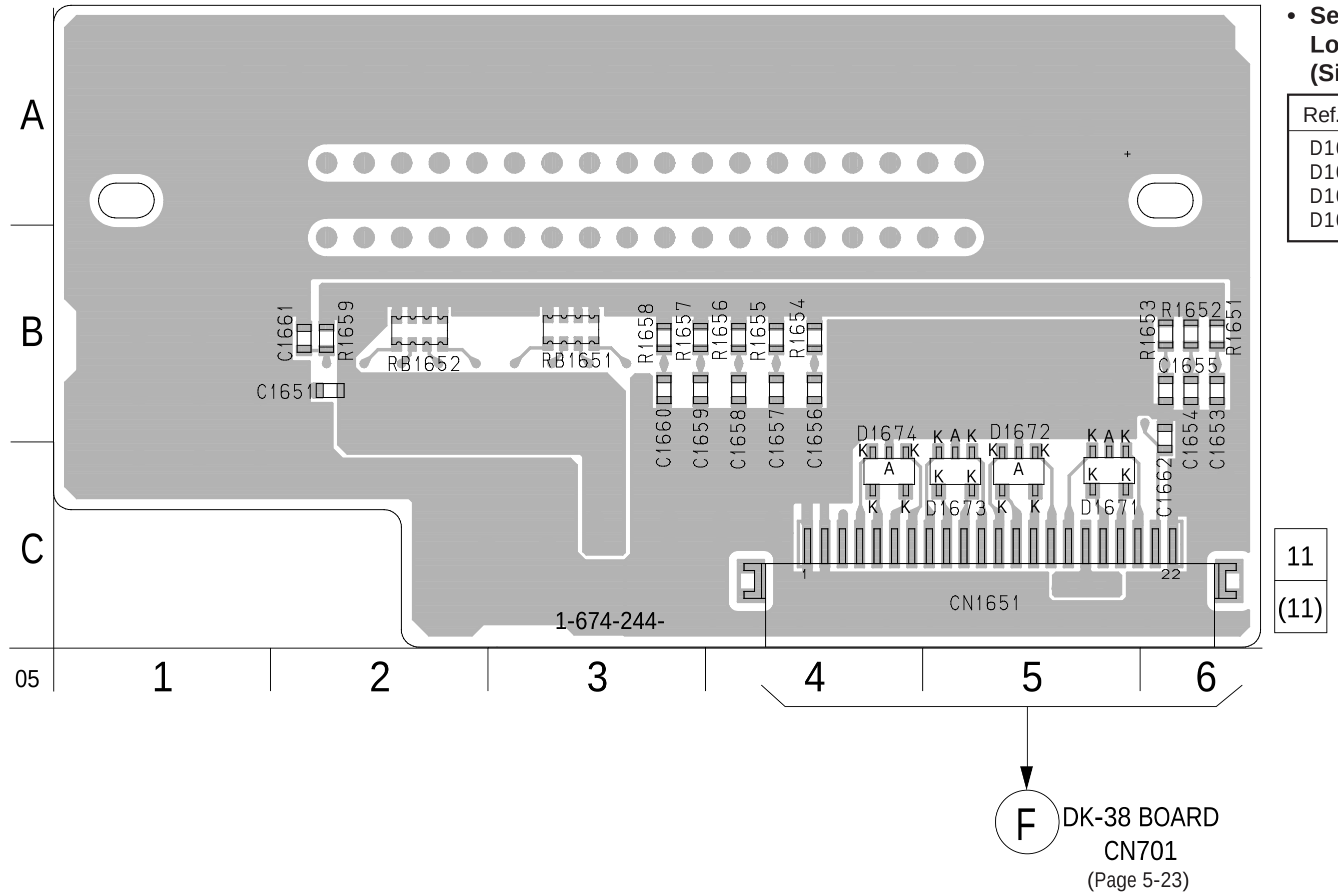

• **Semiconductor Location (Side A)**

Ref. No.	Location
D1671	C-5
D1672	C-5
D1673	C-5
D1674	C-4

【JK-40 BOARD】(SIDE B)

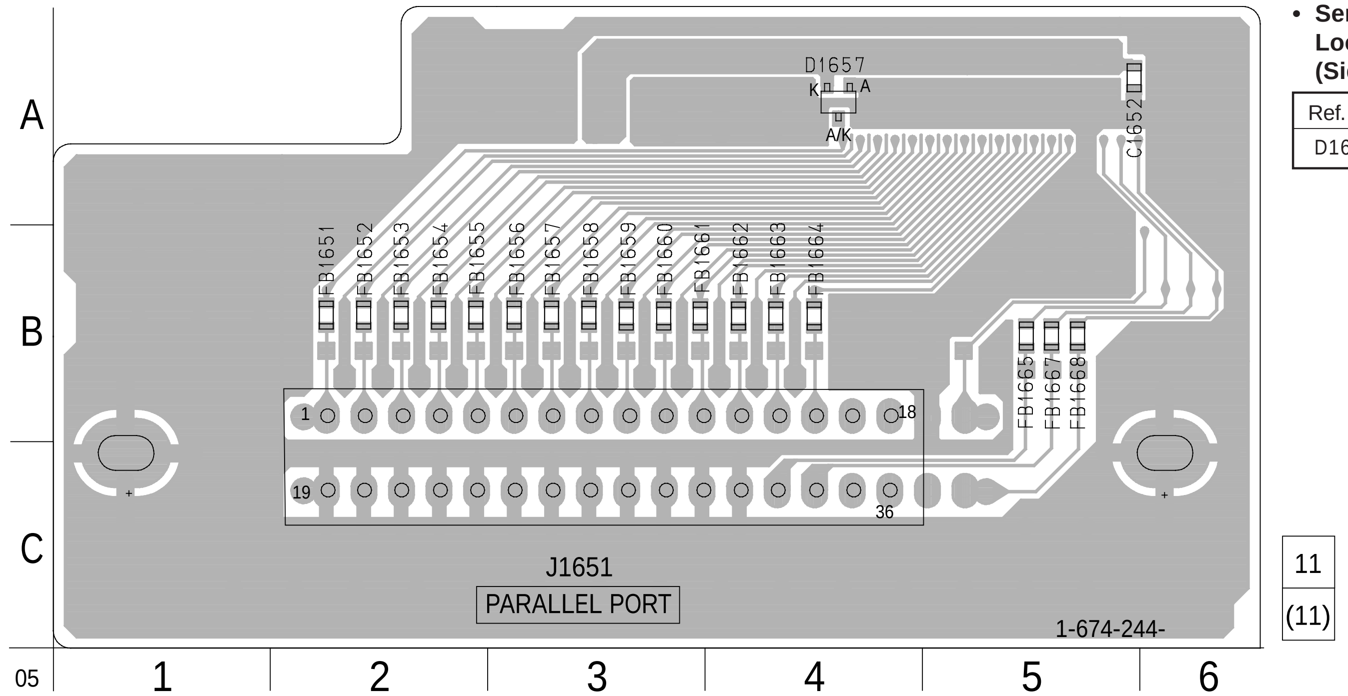

• **Semiconductor Location (Side B)**

Ref. No.	Location
D1657	A-4

5-19. SCHEMATIC DIAGRAM – FE-40/JK-40 Boards –

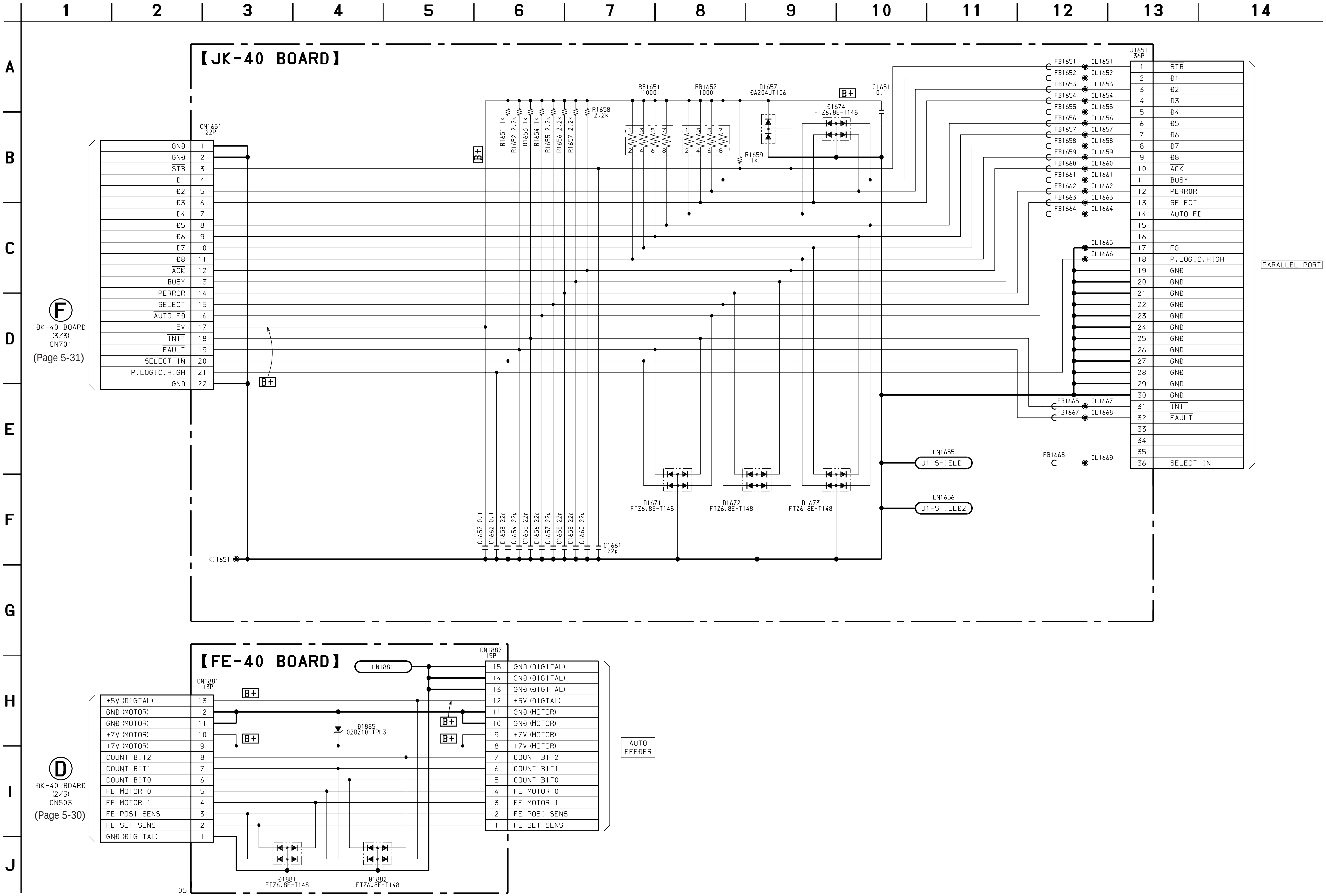

5-20. PRINTED WIRING BOARD – SW-40 Board – • See page 5-14 for Circuit Boards Location.

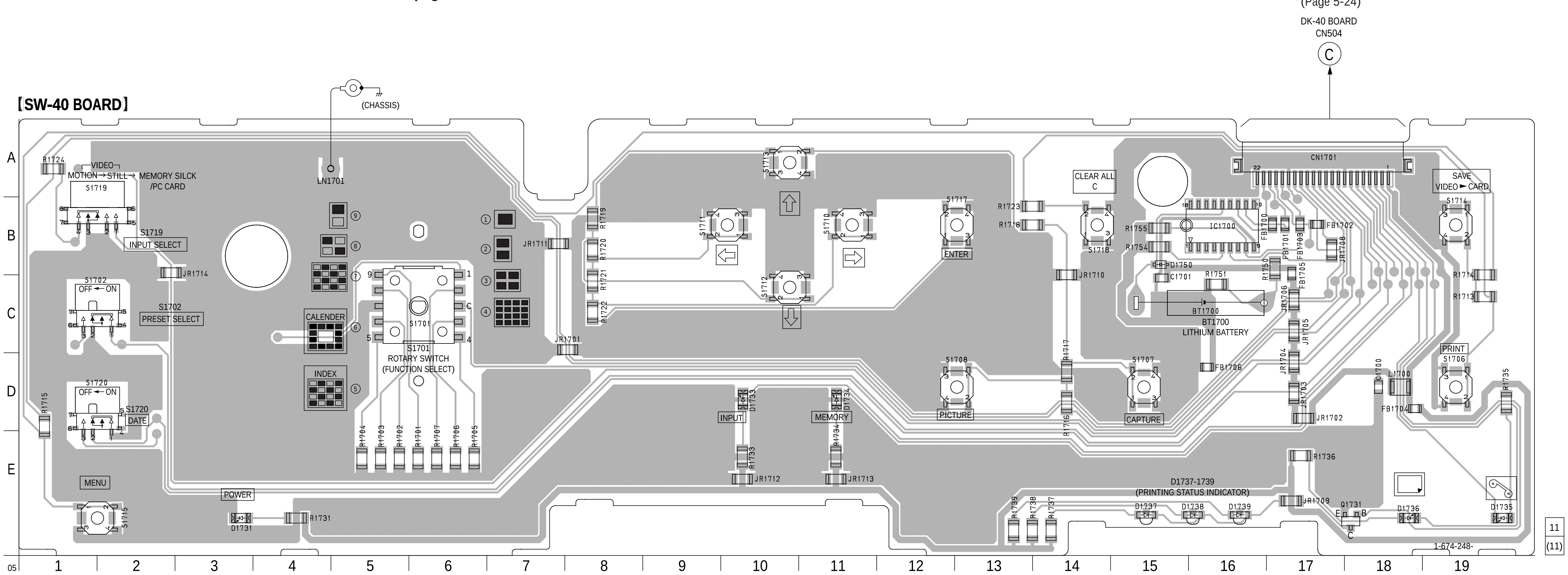

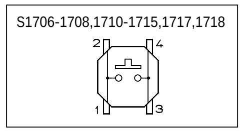

- **Semiconductor Location**

Ref. No.	Location
D1731	E-3
D1733	D-10
D1734	D-11
D1735	E-19
D1736	E-18
D1737	E-16
D1738	E-16
D1739	E-16
D1750	B-15
IC1700	B-16
Q1731	E-18

5-21. SCHEMATIC DIAGRAM – SW-40 Board – **• See page 5-58 for IC Block Diagram.**

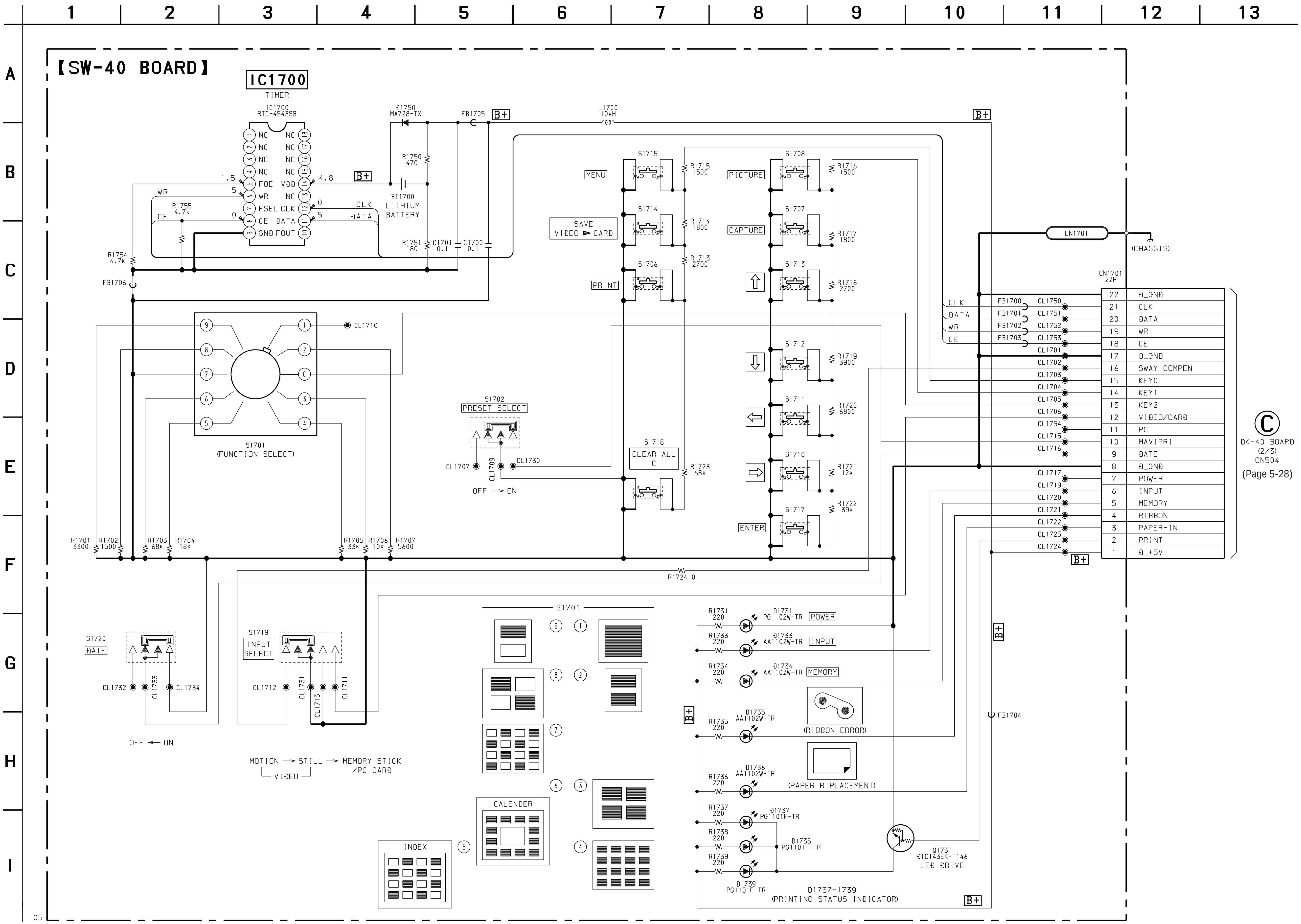

5-22. PRINTED WIRING BOARDS – HP-40/JD-40/MD-40/RD-40 Boards – • See page 5-14 for Circuit Boards Location.

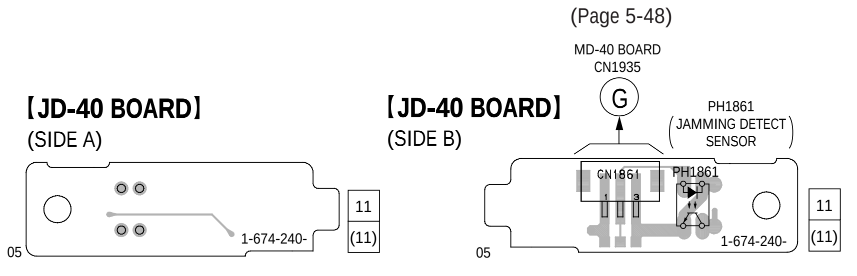

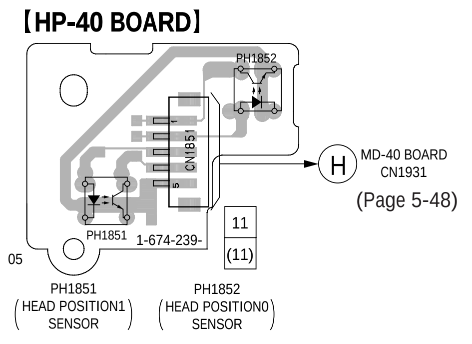

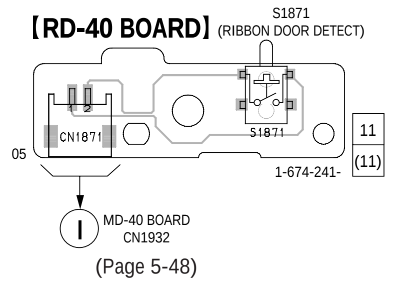

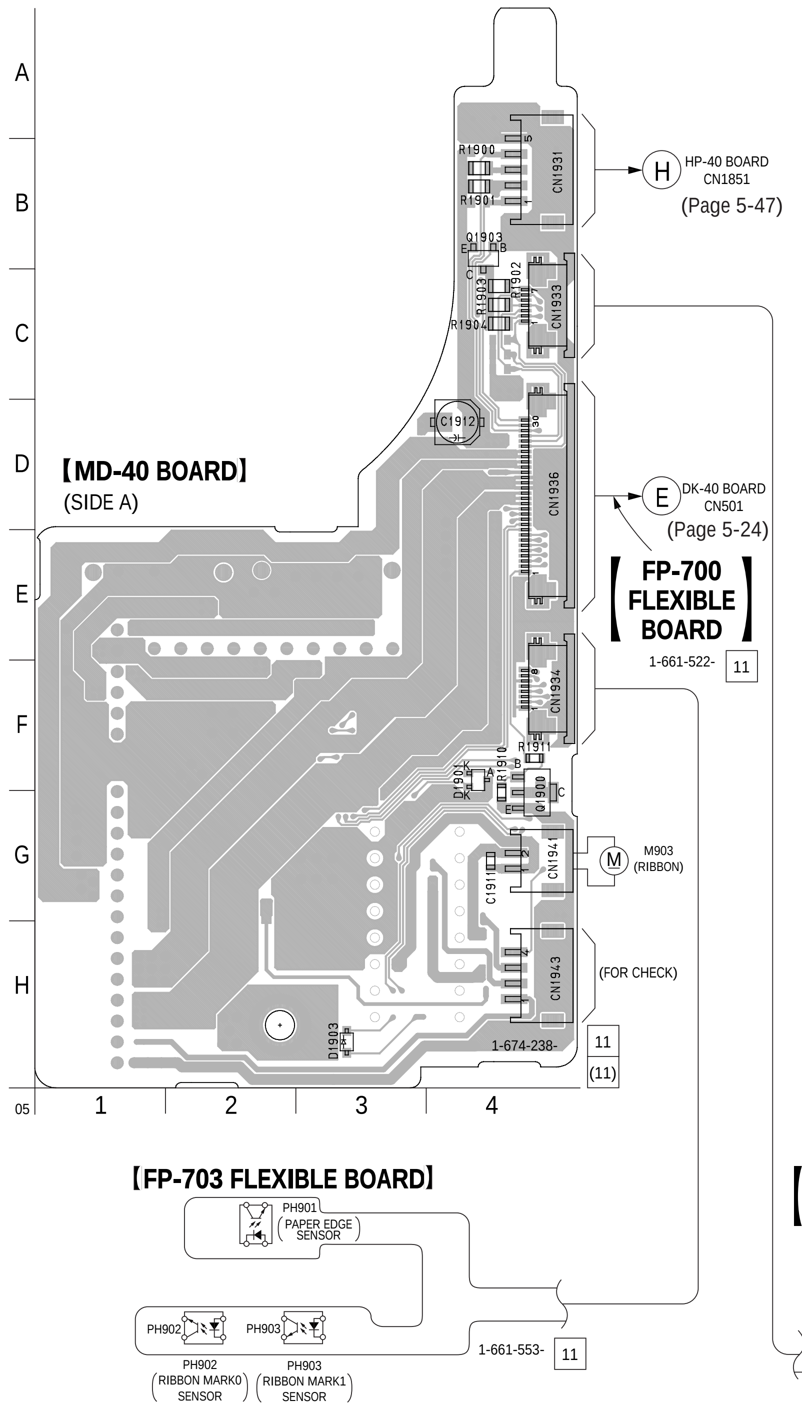

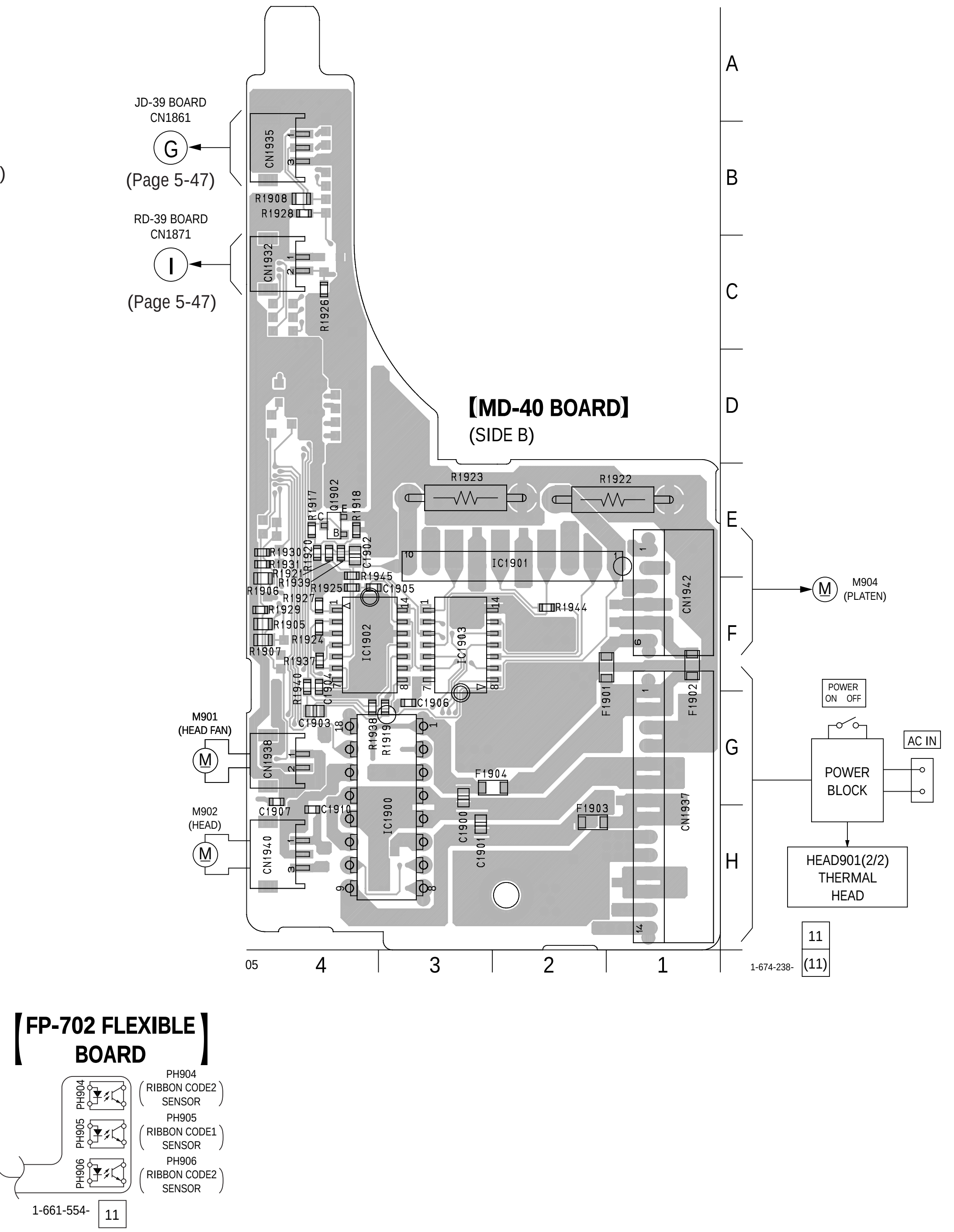

• **Semiconductor Location (Side A)**

Ref. No.	Location
D1901	F-4
D1903	H-3
Q1900	F-4
Q1903	B-4

• **Semiconductor Location (Side B)**

Ref. No.	Location
IC1900	H-3
IC1901	E-2
IC1902	F-4
IC1903	F-3
Q1902	E-4

5-23. SCHEMATIC DIAGRAM – HP-40/JD-40/MD-40/RD-40 Boards – • See page 5-57 for IC Block Diagrams.

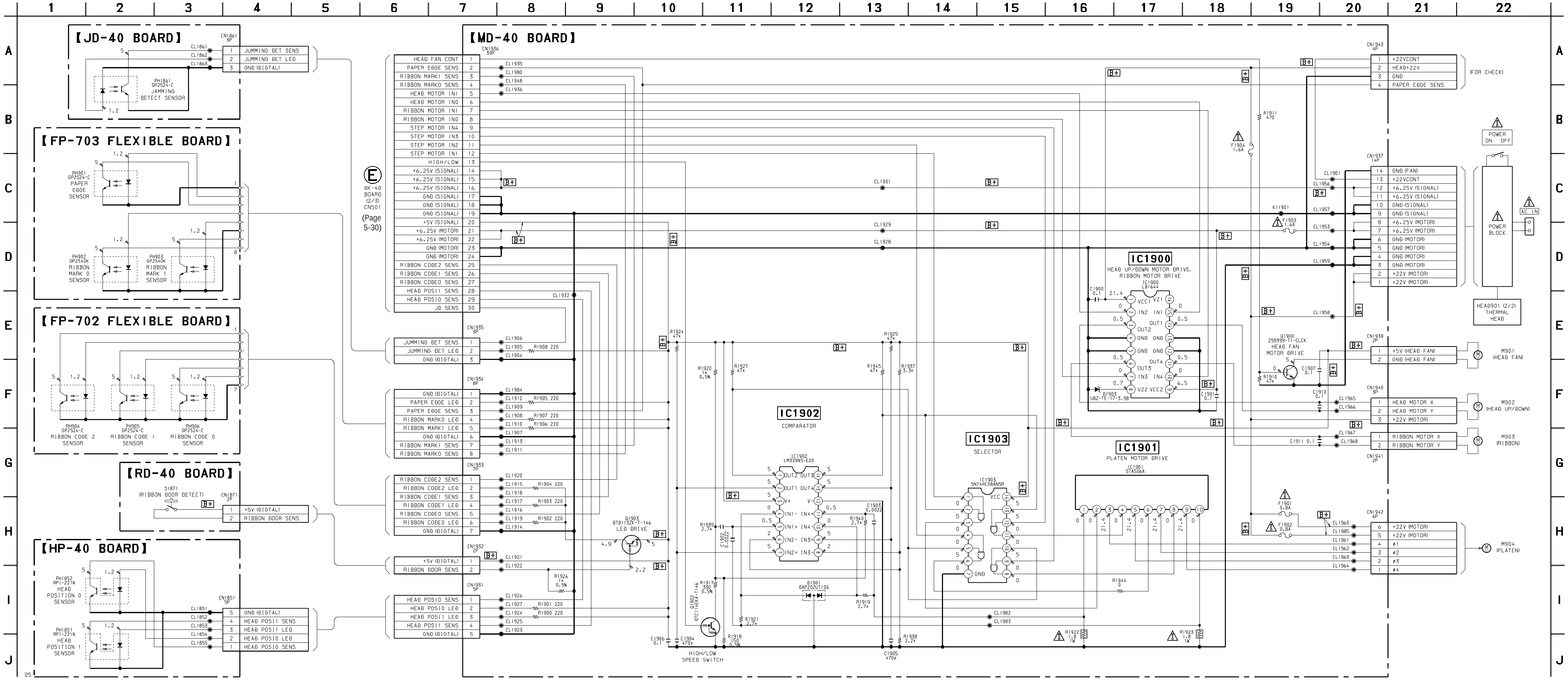

The components identified by mark ⚠ or dotted line with mark ⚠ are critical for safety.
Replace only with part number specified.

• **Waveforms**

– VI-40 Board –

❶ IC105 ㊴ (ACO), IC101 ⑦

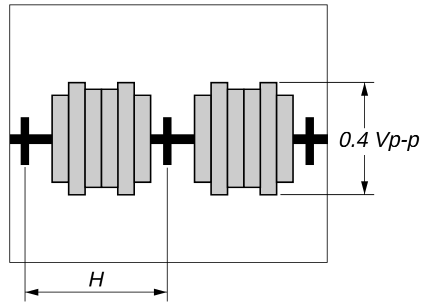

❷ IC105 ㉛ (AYO), IC102 ⑦

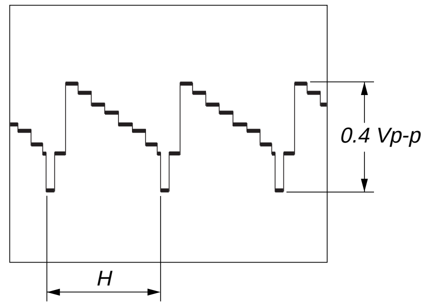

❸ IC105 ㉕ (ADIN)

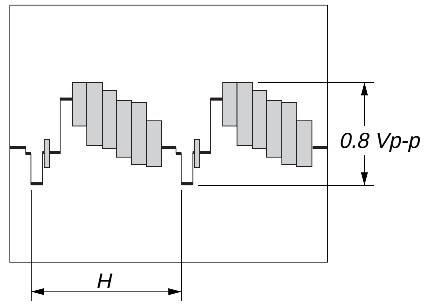

❹ IC108 ㉕ (VIDEO)

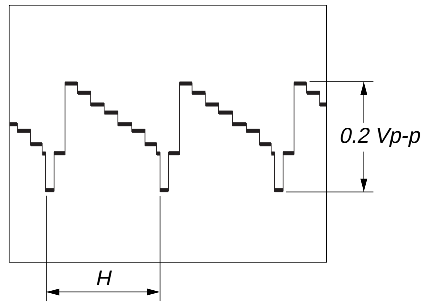

❺ IC108 ⑳ (R-Y)

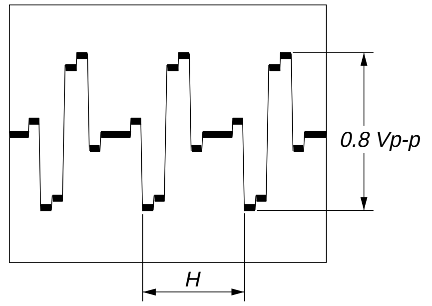

❻ IC108 ⑲ (B-Y)

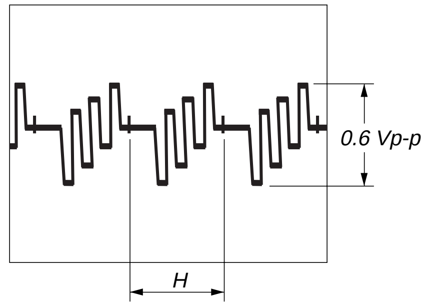

❼ IC108 ⑱ (SC OUT)

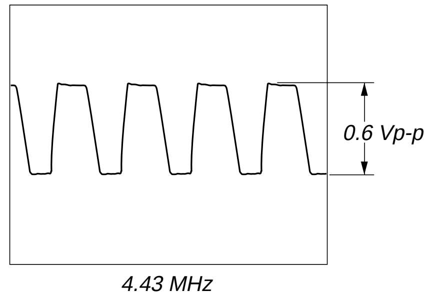

❽ IC108 ⑩ (VCXO)

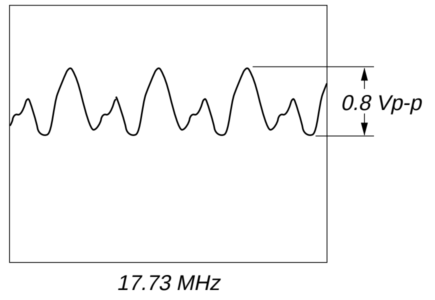

❾ IC108 ⑤ (C IN)

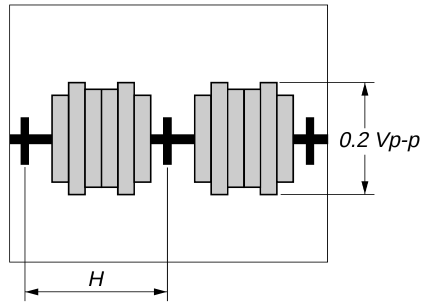

❿ IC103 ⑳ (V OUT)

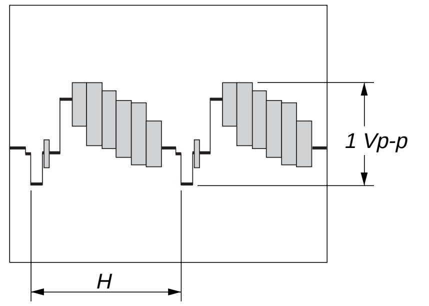

⓫ IC103 ⑩ (SYNC IN)

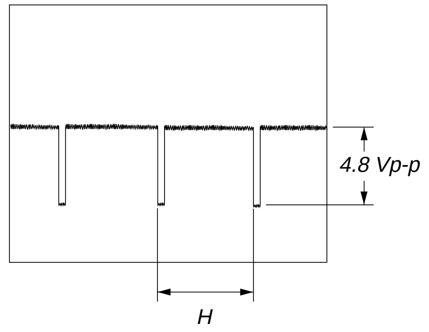

⓬ IC103 ⑥ (XO IN)

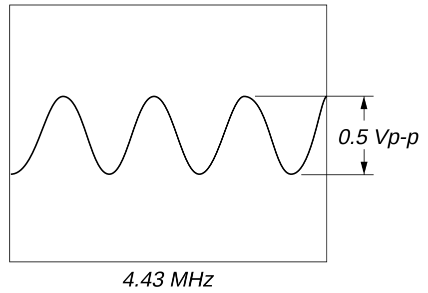

– DK-40 Board –

❶ IC401 ㊲ (YMCK)

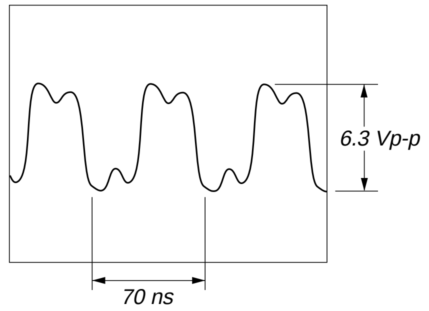

❷ IC401 ㉗ (AFH)

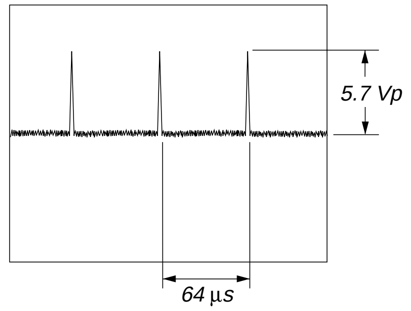

❸ IC401 ㉓ (BFP)

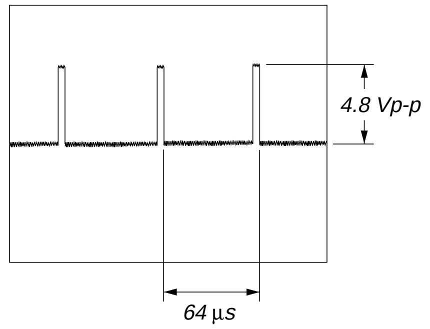

❹ IC407 (113) (ICKI)

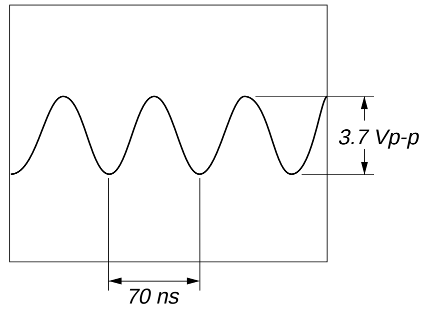

❺ IC407 (82) (VIN)

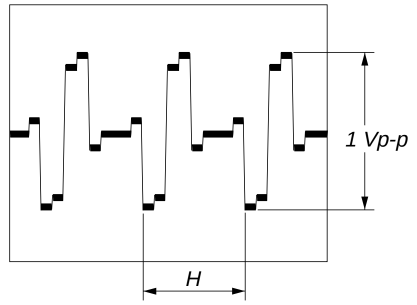

❻ IC407 (73) (UIN)

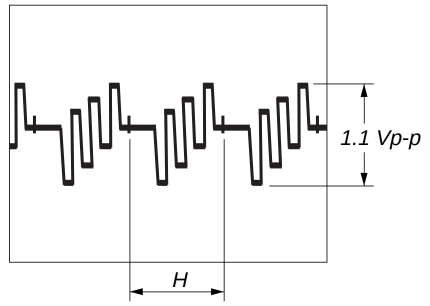

❼ IC407 (64) (YIN)

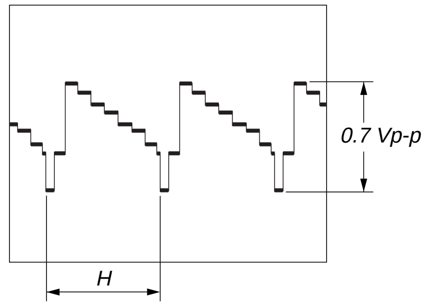

❽ IC407 ㊸ (V_OUT)

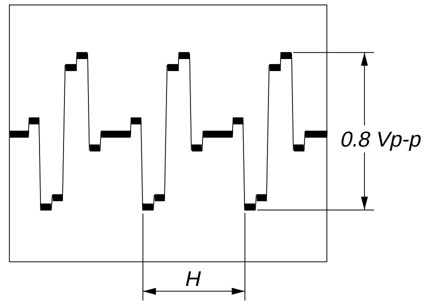

❾ IC407 ㊱ (U_OUT)

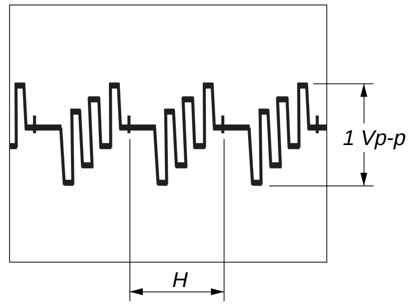

❿ IC407 ㉙ (Y_OUT)

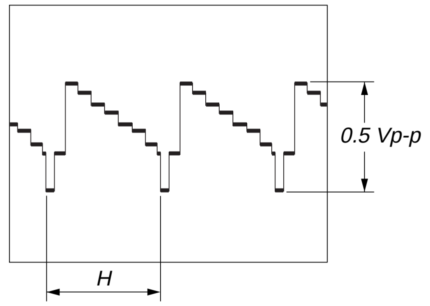

⓫ IC407 ⑳ (SYCX)

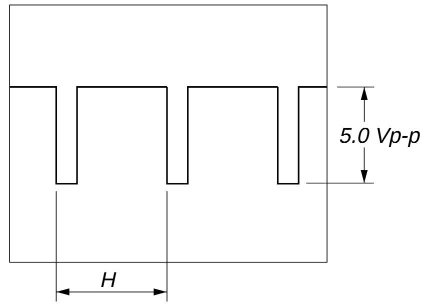

⓬ IC407 ⑲ (SC)

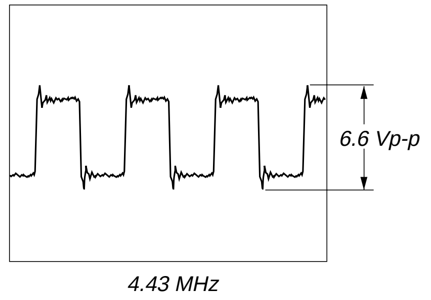

⓭ IC503 (96) (EXTL)

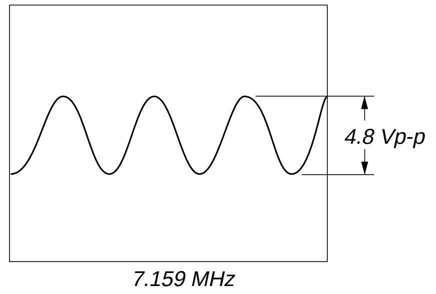

⓮ IC503 (107) (CK)

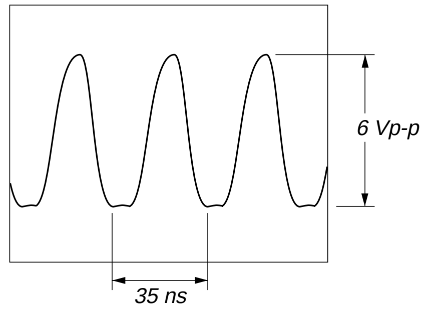

⓯ IC505 ㉛ (CK)

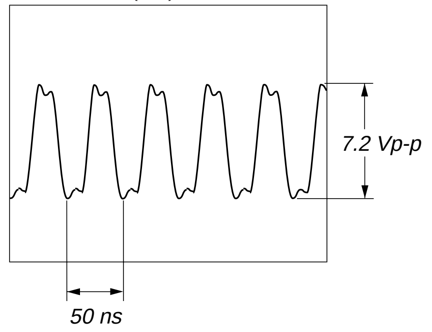

⓰ IC505 ⑬ (XIN)

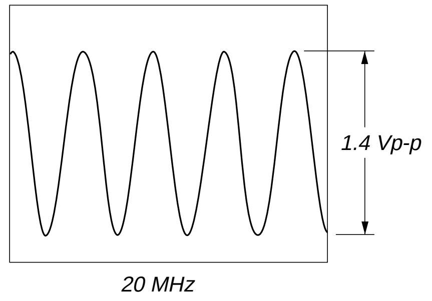

– MP-40 Board –

❶ IC1501 ㉒ (XIN) (MEMORY STICK insert)

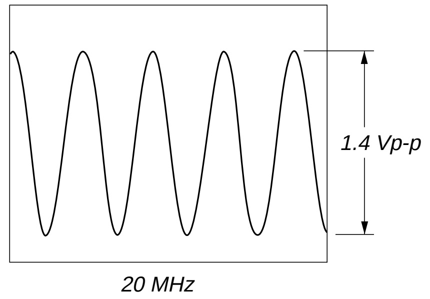

❷ IC1501 (60) (P CLK), IC1502 (51) (EXTAL)
(MEMORY STICK insert)

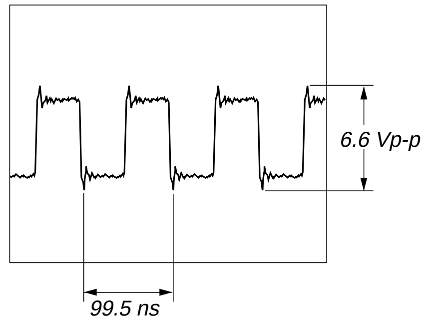

❸ IC1501 (61) (EXTCLK1), IC1502 ㊻
(EXTAL0), IC1503 ㉘ (P CLK)
(MEMORY STICK insert)

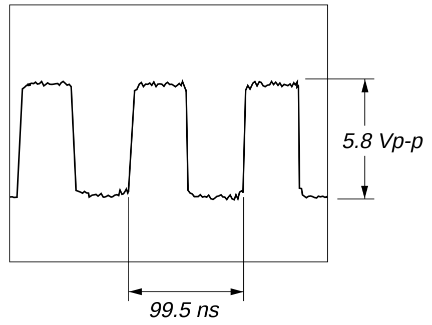

- **IC Block Diagrams**

– VI-40 Board –

IC101, 102　MM1113XFBE

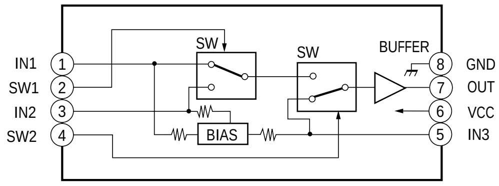

IC103　CXA1229AM-T6

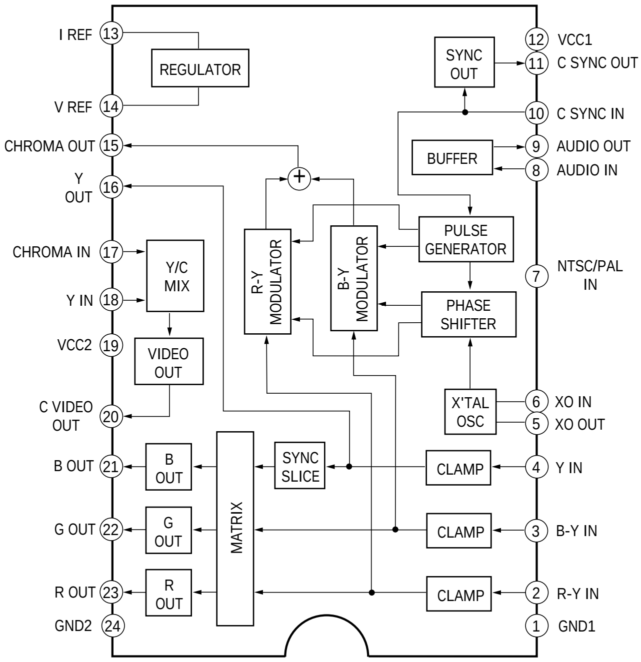

IC105　CXD2024AQ

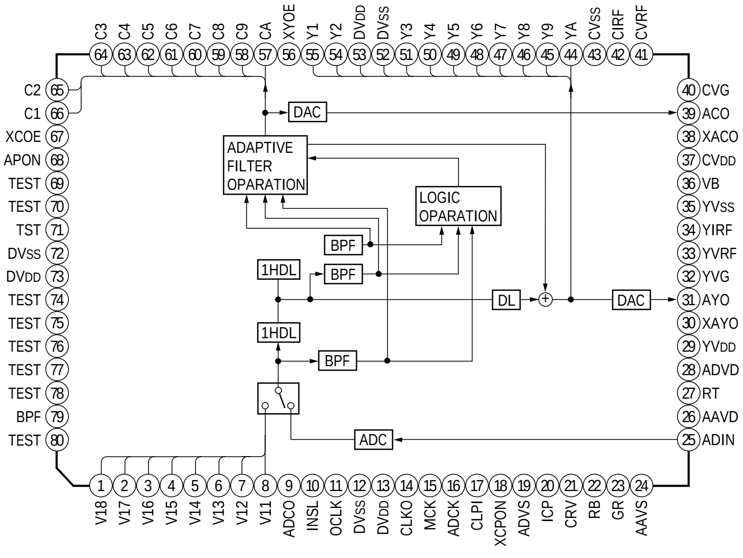

IC108 M51271FP-70AD

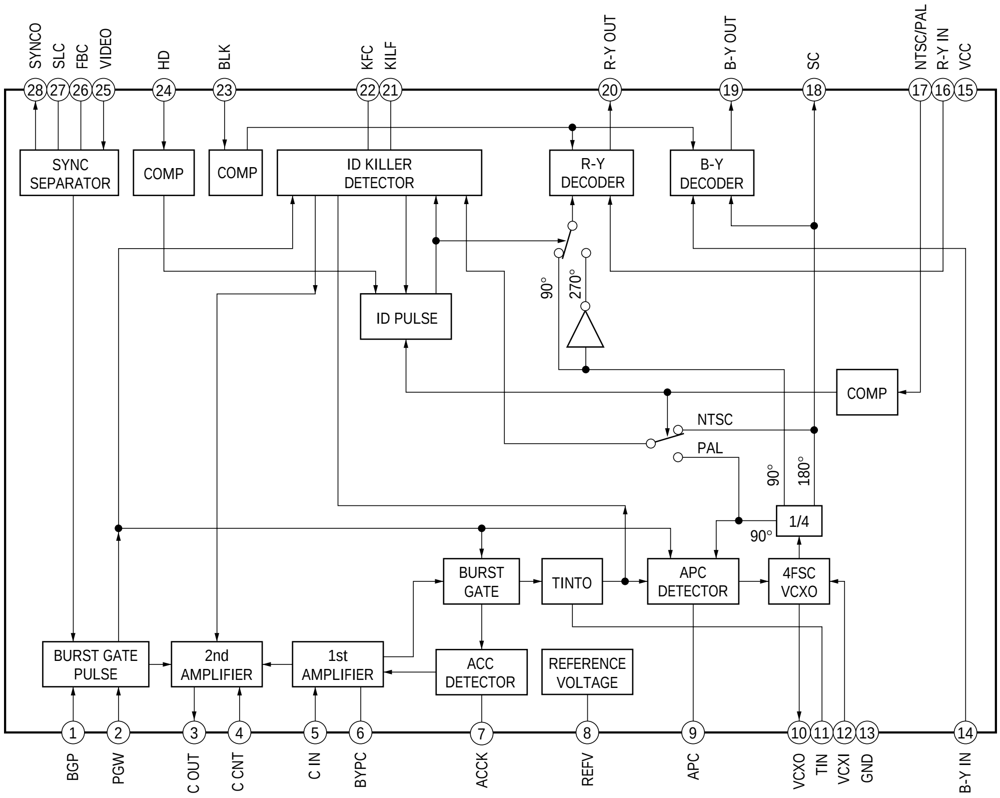

– DK-40 Board –

IC701 HD74LS244FPEL

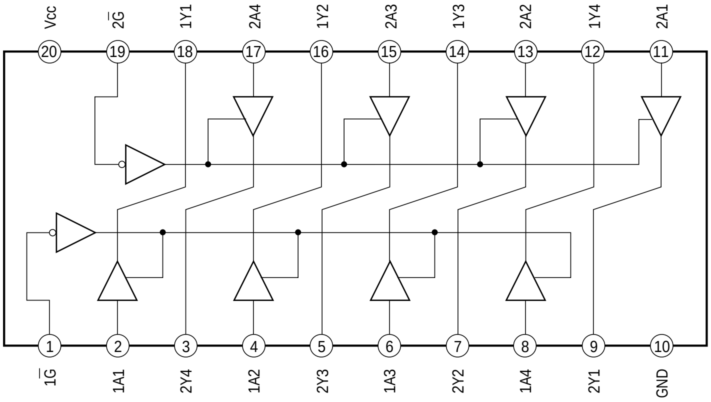

IC702 HD74LS374FP-EL

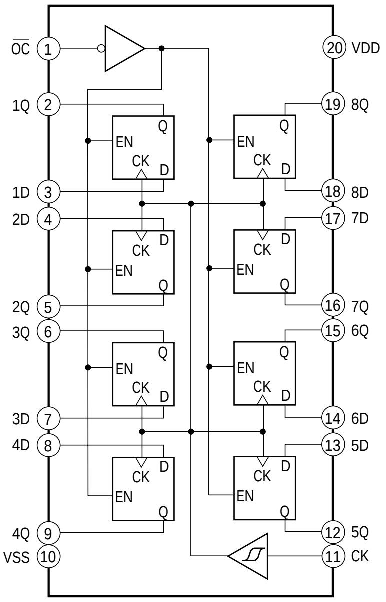

IC703 SN74HC74ANSR

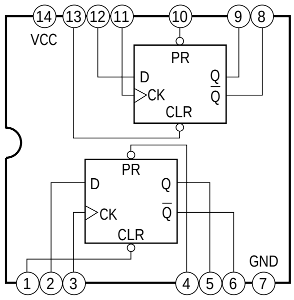

– MP-40 Board –

IC1531 SN74LVCC4245APWR

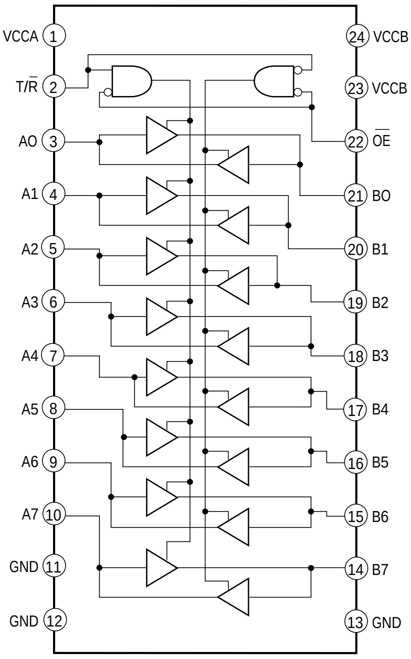

IC1532 – 1534 74VHC244MTCX
IC1535 74VHCT244MTCX

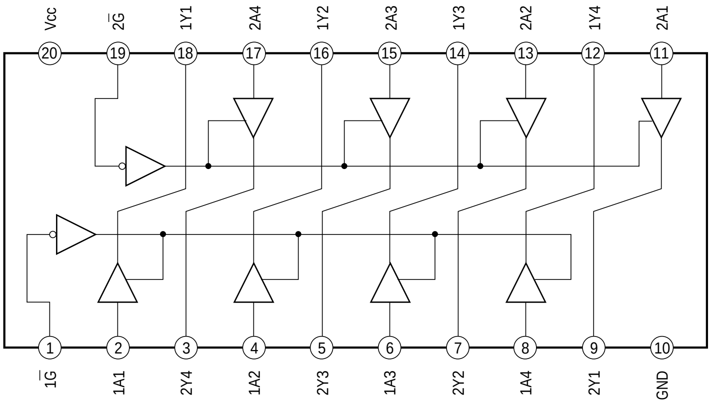

– MD-40 Board –

IC1900 LB1644

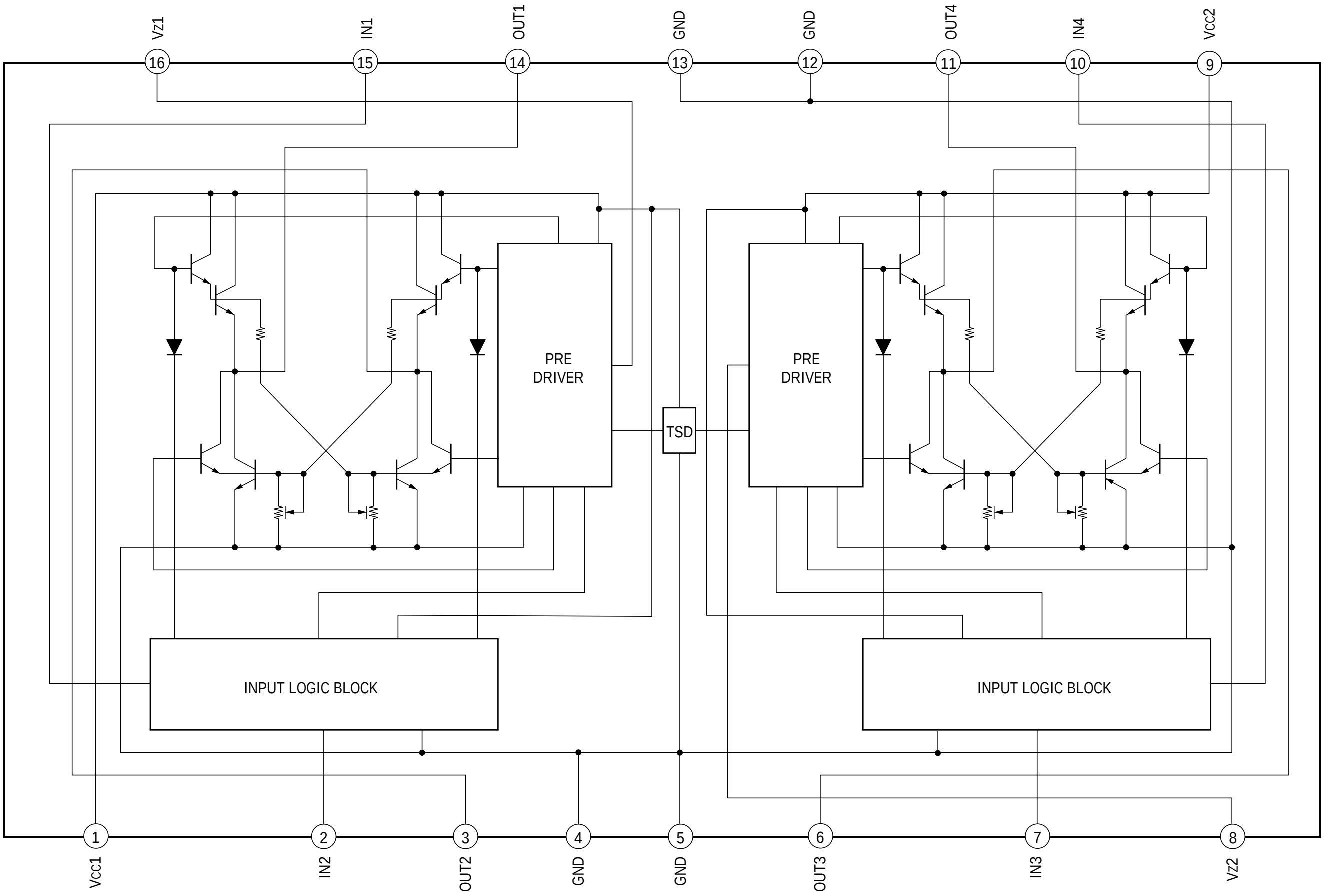

IC1901 STA506A

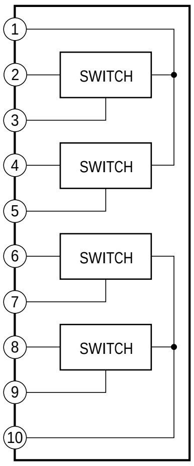

IC1902 LM339NS-E20

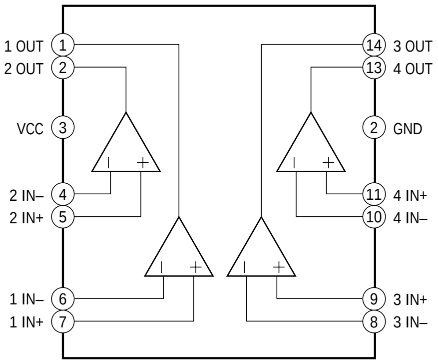

– SW-40 Board –

IC1700 RTC-4543SBB-L2

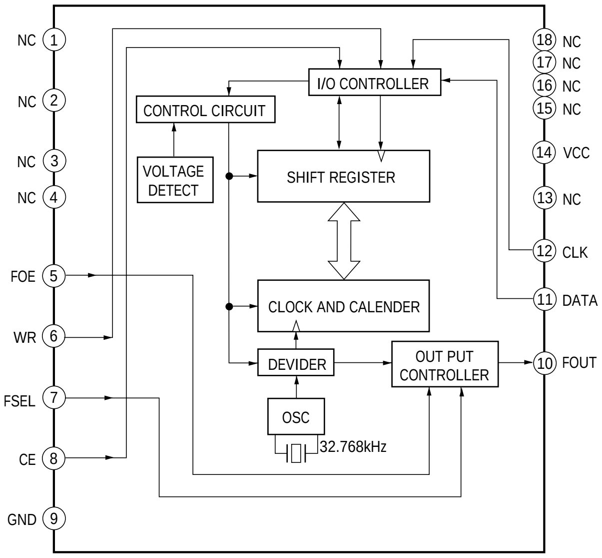

5-24. IC PIN FUNCTION DESCRIPTION

• DK-40 BOARD IC407 F432301PGF (A/D, D/A CONVERTER, MEMORY BUS CONTROL)

Pin No.	Pin Name	I/O	Description
1	MDT15	I/O	Two-way data bus with the D-RAM (IC403) (upper 8 bit)
2	DGND	—	Ground terminal (logic system)
3	DVCC	—	Power supply terminal (+5V) (logic system)
4, 5	MAD11, MAD10	O	Address signal output terminal Not used (open)
6 to11	MAD9 to MAD4	O	Address signal output to the D-RAM (IC403)
12	DGND	—	Ground terminal (logic system)
13 to16	MAD3 to MAD0	O	Address signal output to the D-RAM (IC403)
17	DGND	—	Ground terminal (logic system)
18	DVCC	—	Power supply terminal (+5V) (logic system)
19	SC	O	Sub carrier output terminal Not used (open)
20	SYCX	O	Composite sync signal output to the CXA1229AM (IC103)
21	DVCC	—	Power supply terminal (+5V) (logic system)
22	DGND	—	Ground terminal (logic system)
23	AGND	—	Ground terminal (D/A converter, analog system)
24	BIAS1	I/O	Bias control terminal of the D/A converter
25	COMP1	I/O	Comparator in/out terminal of the D/A converter
26	VREF1	I	Reference voltage (+3V) input terminal Used for the D/A output level adjustment of luminance signal (Y signal)
27	IREF1	I/O	Reference current control terminal
28	AVCC	—	Power supply terminal (+5V) (D/A converter, analog system)
29	Y OUT	O	Analog Y signal output terminal (luminance signal output terminal)
30	AGND	—	Ground terminal (D/A converter, analog system)
31	BIAS2	I/O	Bias control terminal of the D/A converter
32	COMP2	I/O	Comparator in/out terminal of the D/A converter
33	VREF2	I	Reference voltage (+3V) input terminal Used for the D/A output level adjustment of chroma signal
34	IREF2	I/O	Reference current control terminal
35	AVCC	—	Power supply terminal (+5V) (D/A converter, analog system)
36	U OUT	O	Analog U signal output terminal (B-Y color difference signal output terminal)
37	AGND	—	Ground terminal (D/A converter, analog system)
38	BIAS3	I/O	Bias control terminal of the D/A converter
39	COMP3	I/O	Comparator in/out terminal of the D/A converter
40	VREF3	I	Reference voltage (+3V) input terminal Used for the D/A output level adjustment of chroma signal
41	IREF3	I/O	Reference current control terminal
42	AVCC	—	Power supply terminal (+5V) (D/A converter, analog system)
43	V OUT	O	Analog V signal output terminal (R-Y color difference signal output terminal)
44	DGND	—	Ground terminal (logic, digital system)
45	TI CHK	I	Test input terminal (normally: fixed at “L”)
46	LDX	I	Test input terminal (normally: fixed at “L”)
47	RESV	I	Reset signal input for the internal SG V “H”: reset Not used (fixed at “L”)
48	SYET	O	Sync selection signal output at external reading Not used (open)
49	EXET	O	Internal/external selection signal output terminal Not used (open)
50	CGEEX	O	EE, WR/READ select signal output to the video input circuit (IC101, 102) and Y/C separator (IC105)
51	$\overline{RESX}$	I	System reset signal input from the reset signal generator (IC501) “L”: reset For several hundreds msec. after the power supply rises, “L” is input, then it changes to “H”

Pin No.	Pin Name	I/O	Description
52	TSTC	I	Input terminal for the test (normally: fixed at "L")
53	TSTB	I	
54	TSTA	I	
55	TST2	I	
56	TST1	I	
57	TST0	I	
58	DVCC	—	Power supply terminal (+5V) (logic system)
59	DVCC	—	Power supply terminal (+5V) (A/D converter, digital system)
60	AGND	—	Ground terminal (A/D converter, analog system)
61	VRT1	I	Reference voltage (top side) input of the A/D converter
62	VRTS1	O	Reference voltage (top side) output of the A/D converter Generated 3V at connected to VRT1 (pin (61))
63	AVCC	—	Power supply terminal (+5V) (A/D converter, analog system)
64	Y IN	I	Analog Y signal input terminal (luminance signal input terminal)
65	VRBS1	O	Reference voltage (bottom side) output of the A/D converter Generated 1V at connected to VRB1 (pin (66))
66	VRB1	I	Reference voltage (bottom side) input of the A/D converter
67	DGND	—	Ground terminal (A/D converter, digital system)
68	DVCC	—	Power supply terminal (+5V) (A/D converter, digital system)
69	AGND	—	Ground terminal (A/D converter, analog system)
70	VRT2	I	Reference voltage (top side) input of the A/D converter
71	VRTS2	O	Reference voltage (top side) output of the A/D converter Generated 3V at connected to VRT2 (pin (70))
72	AVCC	—	Power supply terminal (+5V) (A/D converter, analog system)
73	U IN	I	Analog U signal input terminal (B-Y color difference signal input terminal)
74	VRBS2	O	Reference voltage (bottom side) output of the A/D converter Generated 1V at connected to VRB2 (pin (75))
75	VRB2	I	Reference voltage (bottom side) input of the A/D converter
76	DGND	—	Ground terminal (A/D converter, digital system)
77	DVCC	—	Power supply terminal (+5V) (A/D converter, digital system)
78	AGND	—	Ground terminal (A/D converter, analog system)
79	VRT3	I	Reference voltage (top side) input of the A/D converter
80	VRTS3	O	Reference voltage (top side) output of the A/D converter Generated 3V at connected to VRT3 (pin (79))
81	AVCC	—	Power supply terminal (+5V) (A/D converter, analog system)
82	V IN	I	Analog V signal input terminal (R-Y color difference signal input terminal)
83	VRBS3	O	Reference voltage (bottom side) output of the A/D converter Generated 1V at connected to VRB3 (pin (84))
84	VRB3	I	Reference voltage (bottom side) input of the A/D converter
85	DGND	—	Ground terminal (A/D converter, digital system)
86	DGND	—	Ground terminal (logic system)
87	DVCC	—	Power supply terminal (+5V) (logic system)
88	EVD	I	Vertical drive data input from the CXD1229Q (IC401)
89	EHD	I	Horizontal drive data input from the CXD1229Q (IC401)
90	ECK	I	Serial clock signal input from the CXD1229Q (IC401)
91	EEVN	I	E/O input from the CXD1229Q (IC401)
92	MNT4	O	Test monitor output terminal (normally: open)
93	MNT3	O	Test monitor output terminal (normally: open)

Pin No.	Pin Name	I/O	Description
94	MNT2	O	Test monitor output terminal (normally: open)
95	MNT1	O	Test monitor output terminal (normally: open)
96	DVCC	—	Power supply terminal (+5V) (logic system)
97	PCSX	O	Chip select signal output to the mechanism controller (IC505)
98	DCSX	O	Chip select signal output terminal Not used (open)
99	SVW	I	Data write end latch pulse input from the system controller (IC503)
100	VRSR	I	Refresh stop request input from the system controller (IC503)
101	DGND	—	Ground terminal (logic system)
102	SVBK	O	V blanking interrupt signal output to the system controller (IC503)
103	STRS	O	Busy signal output to the system controller (IC503)
104	BSH	O	Status (CPU emancipation of memory bus) output to the system controller (IC503)
105	SRDX	I	Data read enable signal input from the system controller (IC503)
106	SWEX	I	Data write enable signal input from the system controller (IC503)
107	SC6X	I	Chip select signal input from the system controller (IC503)
108	SHWX	O	CPU D-RAM access wait control signal output terminal Not used (open)
109	SRSX	I	Row address strobe signal input from the system controller (IC503)
110	SCSX	I	Column address strobe signal input from the system controller (IC503)
111	DGND	—	Ground terminal (logic system)
112	DVCC	—	Power supply terminal (+5V) (logic system)
113	ICKI	I	System clock signal (for INT SG) input from the system controller (IC503)
114	ICKO	O	System clock signal output terminal Not used (open)
115	XGND	—	Ground terminal (crystal system)
116	XOUT	O	System clock signal output terminal Not used (open)
117	XIN	I	System clock signal input terminal Not used (fixed at "L")
118, 119	DGND	—	Ground terminal (logic system)
120	SADB	I	Address signal input for the chip select signal generate Connected to address bus (A14)
121	SADA	I	Address signal input for the chip select signal generate Connected to address bus (A13)
122	DGND	—	Ground terminal (logic system)
123	$\overline{\text{MRSX}}$	O	Row address strobe signal output to the D-RAM (IC403)
124	MCSX	O	Column address strobe signal output to the D-RAM (IC403)
125	$\overline{\text{MWEX}}$	O	Write enable signal output to the D-RAM (IC403)
126	DVCC	—	Power supply terminal (+5V) (logic system)
127 to138	SAD11 to SAD0	I	Address signal input from the system controller (IC503)
139	DGND	—	Ground terminal (logic system)
140 to147	SDT15 to SDT8	I/O	Two-way data bus with the system controller (IC503), mechanism controller (IC505) and D-RAM (IC509) (upper 8 bit)
148	DGND	—	Ground terminal (logic system)
149	DVCC	—	Power supply terminal (+5V) (logic system)
150 to157	SDT7 to SDT0	I/O	Two-way data bus with the system controller (IC503), mechanism controller (IC505), ROM (IC506), D-RAM (IC509), PC card controller (IC1501) and PC card slot (lower 8 bit) Data input from the centronics parallel port
158	DGND	—	Ground terminal (logic system)
159	DVCC	—	Power supply terminal (+5V) (logic system)
160 to167	MDT0 to MTD7	I/O	Two-way data bus with the D-RAM (IC403) (lower 8 bit)
168	DGND	—	Ground terminal (logic system)
169	DVCC	—	Power supply terminal (+5V) (logic system)
170 to176	MDT8 to MTD14	I/O	Two-way data bus with the D-RAM (IC403) (upper 8 bit)

• **DK-40 BOARD IC503 HD6437045E18F (SYSTEM CONTROLLER)**

Pin No.	Pin Name	I/O	Description
1	BSH	I	Status (CPU emancipation of memory bus) input from the A/D, D/A converter (IC407)
2	NC	—	Not used (open)
3	VRSR	O	Refresh stop request output to the A/D, D/A converter (IC407)
4	VWR	O	Internal register data write end latch pulse output to the A/D, D/A converter (IC407)
5	VTRS	I	Busy signal input from the A/D, D/A converter (IC407)
6	VSS	—	Ground terminal
7	A0	O	Address signal output to the ROM (IC506), PC card controller (IC1501) and PC card slot
8 to 11	A1 to A4	O	Address signal output to the A/D, D/A converter (IC407), mechanism controller (IC505), ROM (IC506), D-RAM (IC509), PC card controller (IC1501) and PC card slot
12	VCC	—	Power supply terminal (+5V)
13	A5	O	Address signal output to the A/D, D/A converter (IC407), mechanism controller (IC505), ROM (IC506), D-RAM (IC509), PC card controller (IC1501) and PC card slot
14	VSS	—	Ground terminal
15 to 19	A6 to A10	O	Address signal output to the A/D, D/A converter (IC407), mechanism controller (IC505), ROM (IC506), D-RAM (IC509), PC card controller (IC1501) and PC card slot
20, 21	A11, A12	O	Address signal output to the A/D, D/A converter (IC407), mechanism controller (IC505), ROM (IC506) and D-RAM (IC509)
22, 23	A13, A14	O	Address signal output to the A/D, D/A converter (IC407) and ROM (IC506)
24, 25	A15, A16	O	Address signal output to the ROM (IC506)
26	VCC	—	Power supply terminal (+5V)
27	A17	O	Address signal output to the ROM (IC506)
28	VSS	—	Ground terminal
29	TIMER WR	O	Data write enable signal output to the timer (IC1700)
30	WP	I	Write protect signal input from the PC card controller (IC1501)
31	XRAS	O	Row address strobe signal output to the A/D, D/A converter (IC407) and D-RAM (IC509) "L" active
32	XCASL	O	Lower byte column address strobe signal output to the D-RAM (IC509) "L" active
33	TIMER CE	O	Chip enable signal output to the timer (IC1700)
34	XCASH	O	Column address strobe signal output to the A/D, D/A converter (IC407) Upper byte column address strobe signal output to the D-RAM (IC509) "L" active
35	VSS	—	Ground terminal
36	RDWR	O	Data write enable signal output to the D-RAM (IC509)
37, 38	A18, A19	O	Address signal output terminal Not used
39	NC	—	Not used (open)
40	VCC	—	Power supply terminal (+5V)
41	ST	I	INPUT SELECT switch (S1719) input terminal "L": VIDEO MOTION, "H": VIDEO STILL or MEMORY STICK/PC CARD
42	VSS	—	Ground terminal
43	XRD	O	Data read enable signal output terminal "L" active
44	XWDTOVF	O	Watch dog timer overflow output terminal
45	VS1	I	Card voltage detection signal input from the PC card slot
46	VS2	I	Card voltage detection signal input from the PC card slot
47	TESTO	O	Job output terminal (open)
48	XWR	O	Data write enable signal output terminal "L" active
49	XCS1	O	Chip select signal output for the centronics parallel interface data bus
50	XCS0	O	Chip select signal output to the A/D, D/A converter (IC407)
51	REG	O	Attribute memory select signal output of the PC card slot Register access signal output to the PC card controller (IC1501)

Pin No.	Pin Name	I/O	Description
52	3.3V/5V	O	3.3V/5V selection signal output terminal “L”: 3.3V, “H”: 5V
53	J/U	I	Setting terminal for the destination Not used (open)
54	CP	O	Power on/off control signal output for the PC card and memory stick interface power supply “H”: power on
55	VSS	—	Ground terminal
56	CS	O	Chip select signal output for the PC card interface
57	FLASH	O	Chip select signal output to the ROM (IC506) “L” active
58	XACK	O	Acknowledge signal output to the centronics parallel port
59	NC	—	Not used (open)
60	STB	I	Strobe signal input from the centronics parallel port
61	VSS	—	Ground terminal
62	NC	—	Not used (open)
63	VCC	—	Power supply terminal (+5V)
64	NC	—	Not used (open)
65	CD#	I	Card in or not detection signal input from the PC card slot
66	CD	I	Card in or not detection signal input from the PC card slot
67	VBLK	I	V blanking signal input from the A/D, D/A converter (IC407) “L” active
68	XSTB	I	Strobe signal input from the centronics parallel port
69	$\overline{\text{AT-FD}}$	I	AUTO FD input from the centronics parallel port
70	READY	I	Interrupt request signal input from the PC card controller (IC1501)
71	VSS	—	Ground terminal
72	SEL IN	O	Select in input from the centronics parallel port
73 to 76	D15 to D12	I/O	Two-way data bus with the A/D, D/A converter (IC407), mechanism controller (IC505) and D-RAM (IC509) (upper 8 bit)
77	VCC	—	Power supply terminal (+5V)
78	D11	I/O	Two-way data bus with the A/D, D/A converter (IC407), mechanism controller (IC505) and D-RAM (IC509) (upper 8 bit)
79	VSS	—	Ground terminal
80 to 82	D10 to D8	I/O	Two-way data bus with the A/D, D/A converter (IC407), mechanism controller (IC505) and D-RAM (IC509) (upper 8 bit)
83, 84	D7, D6	I/O	Two-way data bus with the A/D, D/A converter (IC407), mechanism controller (IC505), ROM (IC506), D-RAM (IC509), PC card controller (IC1501) and PC card slot (lower 8 bit) Data input from the centronics parallel port
85	VCC	—	Power supply terminal (+5V)
86	D5	I/O	Two-way data bus with the A/D, D/A converter (IC407), mechanism controller (IC505), ROM (IC506), D-RAM (IC509), PC card controller (IC1501) and PC card slot (lower 8 bit) Data input from the centronics parallel port
87	VSS	—	Ground terminal
88 to 92	D4 to D0	I/O	Two-way data bus with the A/D, D/A converter (IC407), mechanism controller (IC505), ROM (IC506), D-RAM (IC509), PC card controller (IC1501) and PC card slot (lower 8 bit) Data input from the centronics parallel port
93	VSS	—	Ground terminal
94	XTL	I	System clock input terminal (7.159 MHz)
95	MD3	I	Setting terminal for the CPU operational mode (fixed at “H” in this set)
96	EXTL	O	System clock output terminal (7.159 MHz)
97	MD2	I	Setting terminal for the CPU operational mode (fixed at “L” in this set)
98	XINIT	I	Interrupt request signal input from the centronics parallel port
99	VCC/FWP	O	Communication bus control signal output to the external port (normally: pull up)
100	RESET	O	Reset signal output to the PC card controller (IC1501) and PC card slot
101	XWAIT	I	Wait control input from the PC card controller (IC1501) “L” active

Pin No.	Pin Name	I/O	Description
102	MD1/BOOT	I	Setting terminal for the CPU operational mode (fixed at “H” in this set)
103	MD0	I	Setting terminal for the CPU operational mode (fixed at “L” in this set)
104	PLL VCC	—	Power supply terminal (+5V) (PLL system)
105	PLL CAP	I	Connected to capacitor for the PLL
106	PLL VSS	—	Ground terminal (PLL system)
107	CK	O	System clock signal output to the A/D, D/A converter (IC407) (for INT SG)
108	$\overline{\text{XRES}}$	I	System reset signal input from the reset signal generator (IC501) “L”: reset For several hundreds msec. after the power supply rises, “L” is input, then it changes to “H”
109	G1	O	Card selection signal output for the PC card interface
110	BUZZER	O	Buzzer drive signal output terminal
111	IO/XMEM	O	Card selection signal output for the PC card interface
112	VCC	—	Power supply terminal (+5V)
113	SW (V/C)	I	INPUT SELECT switch (S1719) input terminal “L”: MEMORY STICK/PC CARD, “H”: VIDEO MOTION or VIDEO STILL
114	FALT	O	Data 0 and data 4 output to the centronics parallel port
115	SELECT	O	Data 1 and data 5 output to the centronics parallel port
116	PERR	O	Data 2 and data 6 output to the centronics parallel port
117	VSS	—	Ground terminal
118	KEY0	I	Key input terminal (A/D input) S1706, 1714, 1715, 1718 (PRINT, SAVE VIDEO ► CARD, MENU, CLEAR ALL C keys input)
119	KEY1	I	Key input terminal (A/D input) S1707, 1708, 1710 to 1713, 1717 (CAPTURE, PICTURE, ⇨, ⇦, ⇩, ⇧, ENTER keys input)
120	KEY2	I	Rotary switch (S1701) input for the function select
121	HEADTMP	I	Temperature detect input from the thermal-head (HEAD901)
122	PPEDG	I	Paper edge detection sensor (PH901) input terminal
123	JDET	I	Paper jamming detection sensor (PH1861) input terminal
124	AVSS	—	Ground terminal (for A/D converter)
125	RMARK0	I	Ribbon mark (0) detection sensor (PH902) input terminal
126	RMARK1	I	Ribbon mark (1) detection sensor (PH903) input terminal
127	AVREF	I	Reference voltage (+5V) input terminal (for A/D converter)
128	AVCC	—	Power supply terminal (+5V) (for A/D converter)
129	VSS	—	Ground terminal
130	TIMER RXD	I	Serial receive data input from the timer (IC1700)
131	TIMER TXD	O	Serial transmit data output to the timer (IC1700)
132	TIMER SCK	O	Serial data transfer clock signal output to the timer (IC1700)
133	RA2	I	Serial receive data input from the external port (normally: pull up)
134	DA	O	Serial transmit data output to the external port (normally: pull up)
135	VCC	—	Power supply terminal (+5V)
136	NC	—	Not used (open)
137	BUSY	O	Data 3 and data 7 output to the centronics parallel port
138	STP1	O	Stepping pulse (1) output for the platen motor (M904)
139	STP2	O	Stepping pulse (2) output for the platen motor (M904)
140	STP3	O	Stepping pulse (3) output for the platen motor (M904)
141	VSS	—	Ground terminal
142	STP4	O	Stepping pulse (4) output for the platen motor (M904)
143	RAS-CNT	O	Selection signal output of the row address strobe signal
144	C-BUSY	I	Busy signal input from the centronics parallel port

• **DK-40 BOARD IC505 HG51BS263AFB (HEAD CONTROLLER, MECHANISM CONTROLLER)**

Pin No.	Pin Name	I/O	Description
1	FKEY0	I	Sheets bit (0) input from the auto feeder unit
2	FEEDER	I	Auto feeder unit desorption detect input terminal "L": attach, "H": removed
3	FPS	I	Auto feeder unit position detect sensor input terminal
4	BUSY	I/O	Busy signal in/out terminal Connected to TMGE (pin ㉖)
5	HPS0	I	Head position (0) detect sensor (PH1852) input terminal
6	HPS1	I	Head position (1) detect sensor (PH1851) input terminal
7	IVO2	O	Not used (open)
8	IVO1	O	Not used (open)
9	IVI2	I	Not used (fixed at "L")
10	IVI1	I	Not used (fixed at "L")
11	IVEN	I	Not used (fixed at "L")
12	GND	—	Ground terminal
13	XIN	I	System clock input terminal (20 MHz)
14	XOUT	O	System clock output terminal (20 MHz)
15	VCC	—	Power supply terminal (+5V)
16	AC T	I	Not used (fixed at "H")
17	AC W	I	Not used (fixed at "H")
18	CALC	O	Not used (open)
19	DRVX	O	Strobe signal output to the thermal-head (HEAD901) "L": power on
20	PDT3	O	Printing data (3) output to the thermal-head (HEAD901)
21	PDT2	O	Printing data (2) output to the thermal-head (HEAD901)
22	PDT1	O	Printing data (1) output to the thermal-head (HEAD901)
23	PDT0	O	Printing data (0) output to the thermal-head (HEAD901)
24	LATX	O	Serial data latch pulse output to the thermal-head (HEAD901)
25	HDCK	O	Serial data transfer clock signal output to the thermal-head (HEAD901)
26	TMGE	I/O	Timing pulse in/out terminal Connected to BUSY (pin ④)
27	DRQX	O	Not used (open)
28	CKO	O	Clock signal output terminal (20 MHz)
29	VCC	—	Power supply terminal (+5V)
30	GND	—	Ground terminal
31	CK	I	Clock signal input terminal (20 MHz) Connected to CKO (pin ㉘)
32	DTRX	I	Not used (fixed at "L")
33	TMG	I	Timing pulse input terminal Connected to TMG (pin 94)
34	PSTX	I	Print start signal input terminal Connected to PSTX (pin 95)
35	$\overline{\text{RESX}}$	I	System reset signal input from the reset signal generator (IC501) "L": reset For several hundreds msec. after the power supply rises, "L" is input, then it changes to "H"
36	RDX	I	Data read enable signal input from the system controller (IC503) "L" active
37	WEX	I	Data write enable signal input from the system controller (IC503) "L" active
38	VCC	—	Power supply terminal (+5V)
39	CS1X	I	Chip select signal input from the A/D, D/A converter (IC407) "L" active
40	CUTEX	I	Address signal input for the chip select signal generate Connected to address bus (A12)
41	REGX	I	Address signal input for the chip select signal generate Connected to address bus (A11)
42 to 51	AD10 to AD1	I	Address signal input from the system controller (IC503)
52	VCC	—	Power supply terminal (+5V)
53	GND	—	Ground terminal
54 to 61	DT15 to DT8	I/O	Two-way data bus with the A/D, D/A converter (IC407), system controller (IC503) and D-RAM (IC509) (upper 8 bit)

Pin No.	Pin Name	I/O	Description
62, 63	GND	—	Ground terminal
64 to 71	DT7 to DT0	I/O	Two-way data bus with the A/D, D/A converter (IC407), system controller (IC503), ROM (IC506), D-RAM (IC509), PC card controller (IC1501) and PC card slot (lower 8 bit) Data input from the centronics parallel port
72	GND	—	Ground terminal
73	VCC	—	Power supply terminal (+5V)
74	RIBBON-LED	O	LED drive signal output of the ribbon error indicator (D1735) "L": LED on
75	INP-LED	O	LED drive signal output of the INPUT indicator (D1733) "L": LED on
76	MEM-LED	O	LED drive signal output of the MEMORY indicator (D1734) "L": LED on
77	PRN-LED	O	LED drive signal output of the printing status indicator (D1737 to D1739) "H": LED on
78	CARD-LED	O	LED drive signal output of the card indicator "L": LED on Not used (open)
79	PAPER-LED	O	LED drive signal output of the paper replacement indicator (D1736) "L": LED on
80	POWER-LED	O	LED drive signal output of the power indicator "L": LED on Not used (open)
81	STPLOW	O	Low/high speed control signal output for the platen motor (M904)
82	DATE (PWSW)	I	DATE switch (S1720) input terminal "L": on, "H": off
83	FAN	O	Head fan motor (M901) drive signal output terminal "H": motor on
84	FMTRCW	O	Motor drive signal (CW) output for the auto feeder unit "H" active
85	FMTRCCW	O	Motor drive signal (CCW) output for the auto feeder unit "H" active
86	HMTRCW	O	Head up/down motor (M902) drive signal (CW) output terminal "H" active
87	HMTRCCW	O	Head up/down motor (M902) drive signal (CCW) output terminal "H" active
88	VCC	—	Power supply terminal (+5V)
89	RMTRCW	O	Ribbon motor (M903) drive signal (CW) output terminal "H" active
90	RMTRCCW	O	Ribbon motor (M903) drive signal (CCW) output terminal "H" active
91	$\overline{\text{NIBCOM}}$	O	Busy control signal output to the centronics parallel port
92	PRESET PRINT	I	PRESET SELECT switch (S1702) input terminal "L": on, "H": off
93	NTSC/PAL	I	Setting terminal for the video system (NTSC/PAL) "L": PAL mode, "H": NTSC mode Fixed at "L" in this set
94	TMG	O	Timing pulse output terminal Connected to TMG (pin ㉝)
95	PSTX	O	Print start signal output terminal Connected to PSTX (pin ㉞)
96	RCODE2	I	Ribbon code (2) detect sensor (PH904) input terminal
97	RCODE1	I	Ribbon code (1) detect sensor (PH905) input terminal
98	RCODE0	I	Ribbon code (0) detect sensor (PH906) input terminal
99	FKEY2	I	Sheets bit (2) input from the auto feeder unit
100	FKEY1	I	Sheets bit (1) input from the auto feeder unit

• **MP-40 BOARD IC1501 HG72C306AH05TE1 (PC CARD CONTROLLER)**

Pin No.	Pin Name	I/O	Description
1	H A2	I	Address signal input from the system controller (IC503) and PC card slot
2	H INPACK	O	Not used (pull up)
3	H REG	I	Register access signal input from the system controller (IC503)
4	NC	—	Not used (open)
5	H STSCHG	I/O	Not used (pull up)
6	H A1	I	Address signal input from the system controller (IC503) and PC card slot
7	H A0	I	Address signal input from the system controller (IC503) and PC card slot
8	GND	—	Ground terminal
9 to 11	H D0 to H D2	I/O	Two-way data bus with the A/D, D/A converter (IC407), system controller (IC503), mechanism controller (IC505), ROM (IC506), D-RAM (IC509) and PC card slot Data input from the centronics parallel port
12	H IOIS16	O	Write protect signal output to the system controller (IC503)
13 to 15	H D8 to H D10	I/O	In/out terminal for the data signal Not used (fixed at “L”)
16	VCC	—	Power supply terminal (+5V)
17	NC	—	Not used (open)
18	$\overline{\text{RESET}}$	I	System reset signal input from the system controller (IC503) “L”: reset For several hundreds msec. after the power supply rises, “L” is input, then it changes to “H”
19	D S CST B	I	Input terminal for the test (normally: fixed at “H”)
20	TA2	I	Input terminal for the test (normally: fixed at “H”)
21	GND	—	Ground terminal
22	XIN	I	System clock input terminal (20 MHz)
23	XOUT	O	System clock output terminal (20 MHz)
24	GND	—	Ground terminal
25	VCC	—	Power supply terminal (+5V)
26 to 33	NC	—	Not used (open)
34	GND	—	Ground terminal
35 to 39	NC	—	Not used (open)
40	IN F RDY 2	I	Not used (open)
41	NC	—	Not used (open)
42	D S CSW B	I	Not used (fixed at “H”)
43	F CEB 2	I	Not used (fixed at “H”)
44	F VEB 3	I	Not used (fixed at “H”)
45	T	I	Input terminal for the test (normally: fixed at “L”)
46	VCC	—	Power supply terminal (+5V)
47	IN F RDY 1	I	Not used (open)
48	GND	—	Ground terminal
49	P RES	O	Reset signal output to the memory stick/PC card micro computer (IC1502)
50	NC	—	Not used (open)
51	GND	—	Ground terminal
52	P IREQ2	O	Interrupt request signal output to the memory stick/PC card micro computer (IC1502)
53	P IREQ1	O	Interrupt request signal output to the memory stick/PC card micro computer (IC1502)
54	P IREQ0	O	Interrupt request signal output to the memory stick/PC card micro computer (IC1502)
55	P WR	O	Data write enable signal output to the memory stick/PC card micro computer (IC1502), memory stick controller (IC1503) and static RAM (IC1504)
56	P RD	O	Data read enable signal output to the memory stick/PC card micro computer (IC1502), memory stick controller (IC1503) and static RAM (IC1504)

Pin No.	Pin Name	I/O	Description
57	P AS	O	Address strobe signal output to the memory stick/PC card micro computer (IC1502), memory stick controller (IC1503) and static RAM (IC1504)
58	P A17	O	Address signal output to the memory stick/PC card micro computer (IC1502), memory stick controller (IC1503) and static RAM (IC1504)
59	VCC	—	Power supply terminal (+5V)
60	P CLK	O	Clock signal output to the memory stick/PC card micro computer (IC1502)
61	EXTCLK1	O	System clock (10 MHz) signal output to the memory stick/PC card micro computer (IC1502) and memory stick controller (IC1503)
62	GND	—	Ground terminal
63 to 68	P A16, P A10 to P A6	O	Address signal output to the memory stick/PC card micro computer (IC1502), memory stick controller (IC1503) and static RAM (IC1504)
69	GND	—	Ground terminal
70 to 75	P A5 to P A0	O	Address signal output to the memory stick/PC card micro computer (IC1502), memory stick controller (IC1503) and static RAM (IC1504)
76	VCC	—	Power supply terminal (+5V)
77 to 80	P D7 to P D4	I/O	Two-way data bus with the memory stick/PC card micro computer (IC1502), memory stick controller (IC1503) and static RAM (IC1504)
81	GND	—	Ground terminal
82 to 85	P D3 to P D0	I/O	Two-way data bus with the memory stick/PC card micro computer (IC1502), memory stick controller (IC1503) and static RAM (IC1504)
86	P IREQ4	O	Interrupt request signal output to the memory stick/PC card micro computer (IC1502)
87	VCC	—	Power supply terminal (+5V)
88	GND	—	Ground terminal
89 to 92	H D3 to H D6	I/O	Two-way data bus with the A/D, D/A converter (IC407), system controller (IC503), mechanism controller (IC505), ROM (IC506), D-RAM (IC509) and PC card slot Data input from the centronics parallel port
93 to 95	H D11 to H D13	I/O	In/out terminal for the data signal Not used (fixed at “L”)
96	GND	—	Ground terminal
97	H D14	I/O	In/out terminal for the data signal Not used (fixed at “L”)
98	H D7	I/O	Two-way data bus with the A/D, D/A converter (IC407), system controller (IC503), mechanism controller (IC505), ROM (IC506), D-RAM (IC509) and PC card slot Data input from the centronics parallel port
99	H CE1	I	Chip enable signal input from the system controller (IC503)
100	H A10	I	Address signal input from the system controller (IC503) and PC card slot
101	H OE	I	Output enable signal input from the system controller (IC503)
102	H D15	I/O	In/out terminal for the data signal Not used (fixed at “L”)
103	H CE2	I	Chip enable signal input terminal Not used (fixed “H”)
104	H IORD	I	Data read enable signal input from the system controller (IC503)
105	H IOWR	I	Data write enable signal input from the system controller (IC503)
106	VCC	—	Power supply terminal (+5V)
107 to 110	H A9 to H A6	I	Address signal input from the system controller (IC503) and PC card slot
111	GND	—	Ground terminal
112	H WE	I	Data write enable signal input from the system controller (IC503)
113	H IREQ	O	Busy signal output to the system controller (IC503)
114	NC	—	Not used (open)
115	TA1	I	Input terminal for the test (normally: fixed at “L”)
116	H RESET	I	Reset signal input from the system controller (IC503)
117	H WAIT	O	Wait signal output to the system controller (IC503) “L” active
118 to 120	H A5 to H A3	I	Address signal input from the system controller (IC503) and PC card slot

- **MP-40 BOARD IC1502 HD6433032ST06X (MEMORY STICK/PC CARD MICRO COMPUTER)**

Pin No.	Pin Name	I/O	Description
1	PB0	O	Reset signal output to the memory stick controller (IC1503)
2 to 4	NC	—	Not used (open)
5	PB4	—	Not used (open)
6	PB5	O	Power on/off control signal output for the memory stick +3.3V power supply "H": power on
7 to 10	NC	—	Not used (open)
11	IREQ4	I	Interrupt request signal input from the PC card controller (IC1501)
12	VSS	—	Ground terminal
13 to 20	D0 to D7	I/O	Two-way data bus with the PC card controller (IC1501), memory stick controller (IC1503) and static RAM (IC1504)
21	VCC	—	Power supply terminal (+5V)
22 to 29	A0 to A7	I	Address signal input from the PC card controller (IC1501)
30	VSS	—	Ground terminal
31 to 37	A8 to A14	I	Address signal input from the PC card controller (IC1501)
38	NC	—	Not used (open)
39 to 41	A16 to A18	I	Address signal input from the PC card controller (IC1501)
42	NC	—	Not used (open)
43	P6 0	—	Not used (fixed at "H")
44	MD0	I	Setting terminal for the CPU operational mode (fixed at "H" in this set)
45	MD1	I	Setting terminal for the CPU operational mode (fixed at "L" in this set)
46	EXTAL0	I	System clock (10 MHz) signal input from the PC card controller (IC1501)
47	ST BY	I	Standby signal input terminal (fixed at "H" in this set)
48	RES	I	Reset signal input from the PC card controller (IC1501)
49	NMI	I	Non-maskable interrupt input terminal Fixed at "H" in this set
50	VSS	—	Ground terminal
51	EXTAL	I	Clock signal input from the PC card controller (IC1501)
52	NC	—	Not used (open)
53	VCC	—	Power supply terminal (+5V)
54	AS	I	Address strobe signal input from the PC card controller (IC1501)
55	RD	I	Data read enable signal input from the PC card controller (IC1501)
56	WR	I	Data write enable signal input from the PC card controller (IC1501)
57	NC	—	Not used (open)
58	VSS	—	Ground terminal
59	P7 0	—	Not used (fixed at "H")
60 to 66	VSS	—	Ground terminal
67, 68	VCC	—	Power supply terminal (+5V)
69	IREQ0	I	Interrupt request signal input from the PC card controller (IC1501)
70	IREQ1	I	Interrupt request signal input from the PC card controller (IC1501)
71	IREQ2	I	Interrupt request signal input from the PC card controller (IC1501)
72	IREQ3	I	Interrupt request signal input from the memory stick controller (IC1503)
73	PA0	O	Chip enable signal output to the static RAM (IC1504)
74 to 80	NC	—	Not used (open)

• **MP-40 BOARD IC1503 HG71G030A2R05TE (MEMORY STICK CONTROLLER)**

Pin No.	Pin Name	I/O	Description
1	TEST	I	Input terminal for the test Not used (open)
2	A TST	I	Input terminal for the test Not used (open)
3	B TST	I	Input terminal for the test Not used (open)
4 to 6	NC	—	Not used (open)
7	VCC 3V	—	Power supply terminal (+3.3V)
8, 9	NC	—	Not used (open)
10	GND	—	Ground terminal
11 to 13	NC	—	Not used (open)
14	A IN	I	Input terminal for the test Not used (open)
15	B IN	I	Input terminal for the test Not used (open)
16, 17	NC	—	Not used (open)
18	P RES	I	Reset signal input from the memory stick/PC card micro computer (IC1502)
19	GND	—	Ground terminal
20	P IREQ3	O	Interrupt request signal output to the memory stick/PC card micro computer (IC1502)
21	P WR	I	Data write enable signal input from the PC card controller (IC1501)
22	P RD	I	Data read enable signal input from the PC card controller (IC1501)
23	P AS	I	Address strobe signal input from the PC card controller (IC1501)
24 to 26	P A18 to P A16	I	Address signal input from the PC card controller (IC1501)
27	GND	—	Ground terminal
28	P CLK	I	System clock (10 MHz) signal input from the PC card controller (IC1501)
29	GND	—	Ground terminal
30	NC	—	Not used (open)
31	VCC 5V	—	Power supply terminal (+5V)
32, 33	NC	—	Not used (open)
34	GND	—	Ground terminal
35 to 42	P A7 to P A0	I	Address signal input from the PC card controller (IC1501)
43 to 46	NC	—	Not used (open)
47	VCC 3V	—	Power supply terminal (+3.3V)
48, 49	NC	—	Not used (open)
50	GND	—	Ground terminal
51	MS CLK	O	Clock signal output to the memory stick card
52	GND	—	Ground terminal
53	NC	—	Not used (open)
54	MS DIO	I/O	Two-way data bus with the memory stick card
55, 56	NC	—	Not used (open)
57	GND	—	Ground terminal
58	MS BS	I/O	Two-way data bus with the memory stick card
59	GND	—	Ground terminal
60	NC	—	Not used (open)
61	GND	—	Ground terminal
62	VCC 5V	—	Power supply terminal (+5V)
63 to 66	P D0 to P D3	I/O	Two-way data bus with the PC card controller (IC1501), memory stick/PC card micro computer (IC1502) and static RAM (IC1504)
67	GND	—	Ground terminal
68	P WAIT	—	Not used (open)
69, 70	NC	—	Not used (open)

Pin No.	Pin Name	I/O	Description
71	VCC 5V	—	Power supply terminal (+5V)
72, 73	NC	—	Not used (open)
74	GND	—	Ground terminal
75 to 78	P D4 to P D7	I/O	Two-way data bus with the PC card controller (IC1501), memory stick/PC card micro computer (IC1502) and static RAM (IC1504)
79	GND	—	Ground terminal
80	VCC 5V	—	Power supply terminal (+5V)

SECTION 6
EXPLODED VIEWS

NOTE:
- -XX and -X mean standardized parts, so they may have some difference from the original one.
- Color Indication of Appearance Parts
  Example:
  KNOB, BALANCE (WHITE) . . . (RED)
  ↑ ↑
  Parts Color Cabinet's Color
- Items marked "*" are not stocked since they are seldom required for routine service. Some delay should be anticipated when ordering these items.
- The mechanical parts with no reference number in the exploded views are not supplied.
- Hardware (# mark) list and accessories and packing materials are given in the last of the electrical parts list.

The components identified by mark ⚠ or dotted line with mark ⚠ are critical for safety.
Replace only with part number specified.

(1) UPPER CABINET SECTION

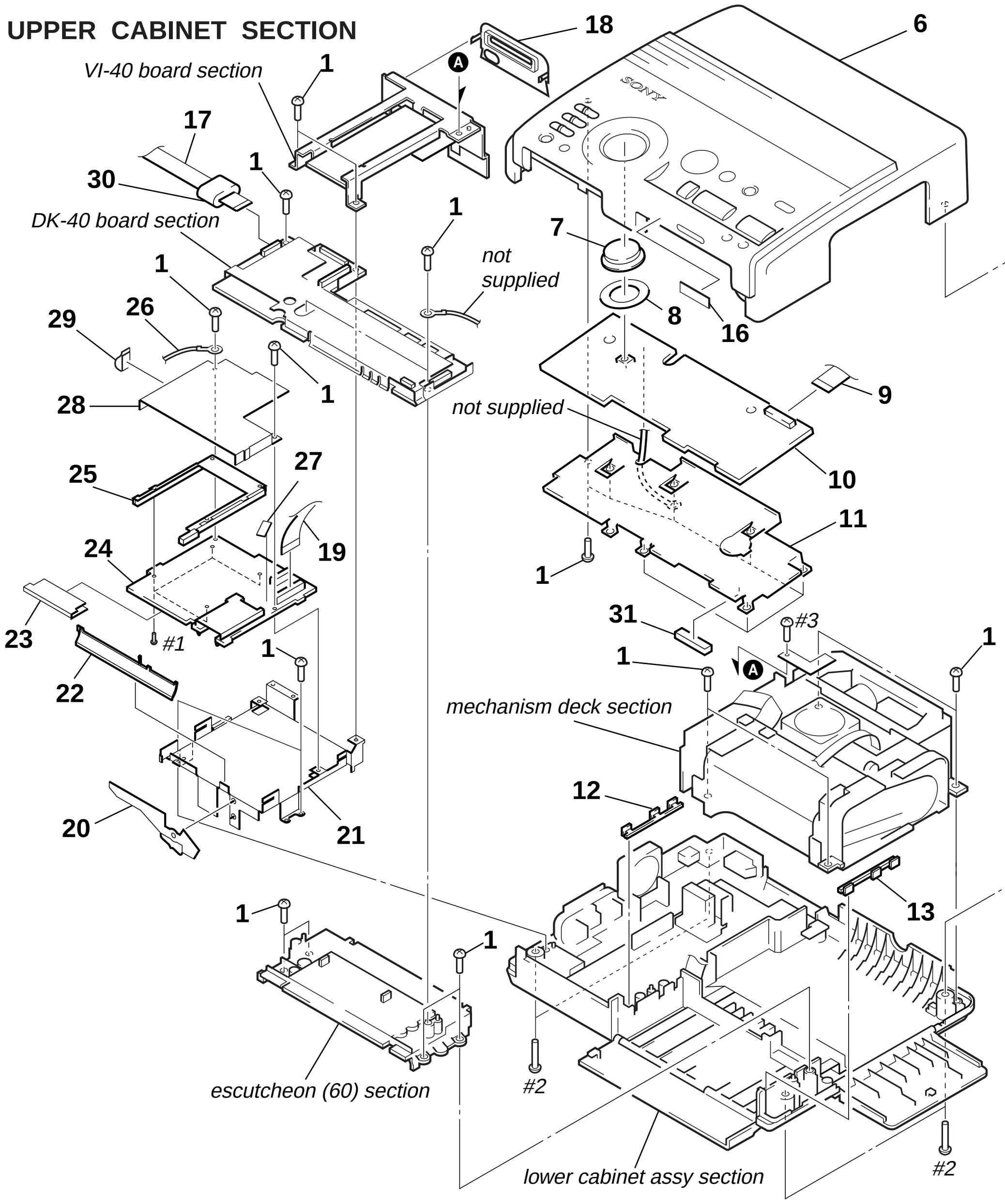

Ref. No.	Part No.	Description	Remark
1	3-946-346-01	SCREW (+BV) (2.6X8), TAPPING	
6	X-4622-189-1	CABINET ASSY (CED), UPPER	
7	4-639-920-11	DIAL	
8	4-639-919-01	HOLDER, DIAL	
9	1-790-361-21	FFC (DKSW39)	
10	A-8056-226-A	SW-40 BOARD, COMPLETE	
* 11	4-639-921-01	REINFORCEMENT, BUTTON	
12	3-971-519-01	RAIL (L), FEEDER	
13	3-971-530-01	RAIL (R), FEEDER	
* 16	4-642-454-01	LABEL (E), LEFT	
17	1-790-969-11	CABLE, FLAT (DKMP15)	
18	4-642-253-01	COVER, JACK	
19	1-790-968-11	CABLE, FLAT (DKMP30)	
* 20	4-642-248-01	LEVER, CARD SELECT	
* 21	X-4622-187-1	BRACKET ASSY, MP	
* 22	4-642-252-01	PANEL, CARD	
23	4-642-503-01	MP SPACER	
24	A-8056-229-A	MP-40 BOARD, COMPLETE	
25	4-642-250-01	EJECTOR, PCMCIA	
26	1-956-625-21	HARNESS (HH-C00-010-BB)	
27	4-643-152-01	SHEET, MP PROTECT	
28	4-643-016-01	CASE, MP SHIELD	
29	4-643-570-01	OVER, STICK FINGER HOLD	
30	1-500-602-11	BEAD, FERRITE	
31	4-643-569-01	GASKET	

(2) DK-40/VI-40 BOARD SECTION

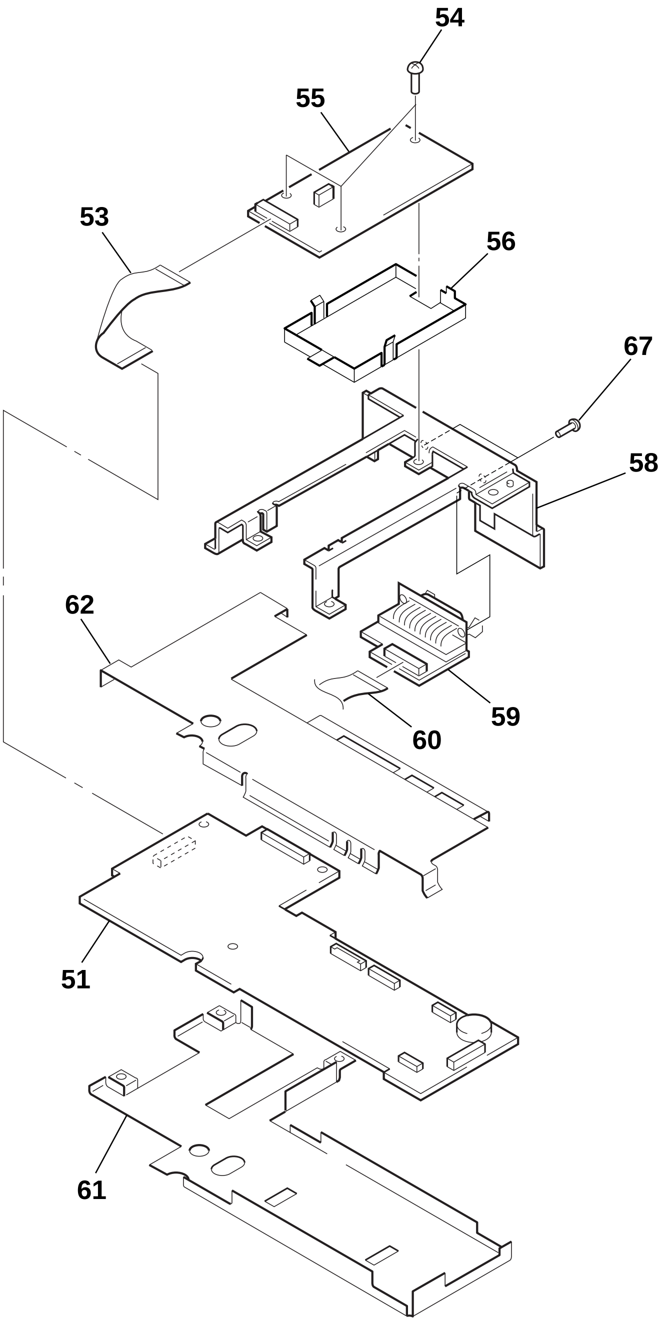

Ref. No.	Part No.	Description	Remark
51	A-8056-238-A	DK-40 BOARD, COMPLETE	
53	1-790-862-11	CABLE, FLAT (DKVI40)	
54	3-946-346-01	SCREW (+BV) (2.6X8), TAPPING	
55	A-8056-240-A	VI-40 BOARD, COMPLETE	
* 56	4-642-501-01	SHIELD, VI	
* 58	4-642-244-01	BRACKET, JK	
59	A-8056-235-A	JK-40 BOARD, COMPLETE	
60	1-790-861-11	CABLE, FLAT (DKJK40)	
* 61	3-050-970-12	CASE (LOWER), DK SHIELD	
* 62	3-050-969-11	CASE (UPPER), DK SHIELD	
67	4-640-773-01	SCREW, CROSS (WITH HOLE)	

(3) MECHANISM DECK SECTION-1

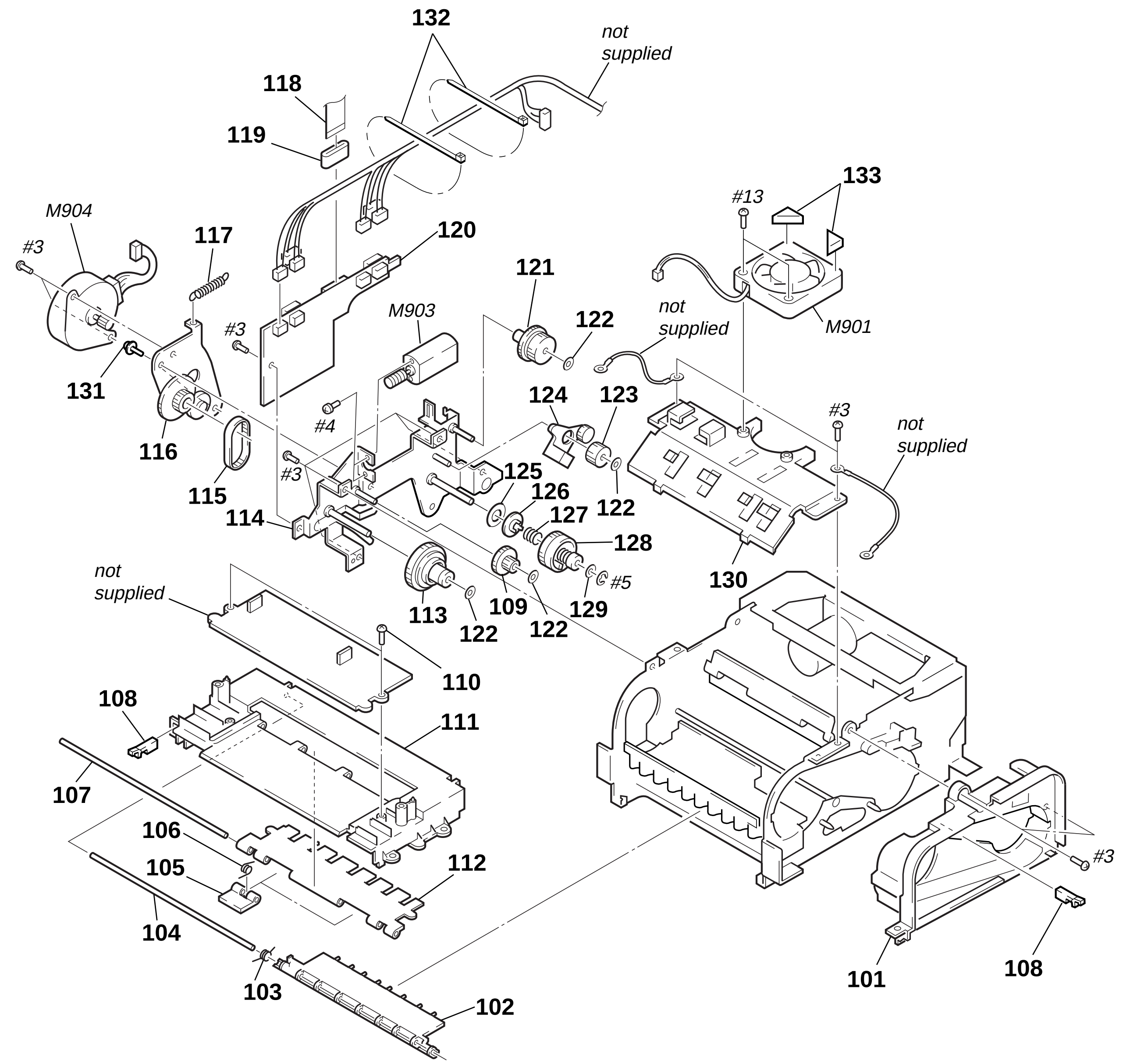

Ref. No.	Part No.	Description	Remark
101	4-642-234-01	GUIDE, CASSETTE ENTRANCE	
102	3-971-511-05	GUIDE, PAPER	
103	3-971-507-03	SPRING, PAPER GUIDE	
104	3-971-505-03	SHAFT (D)	
105	3-971-504-04	RETAINER, PAPER	
106	3-971-508-01	SPRING, SEPARETION GUIDE	
107	3-971-506-02	SHAFT (E)	
108	4-995-081-01	LATCH, DC	
109	3-971-435-01	WHEEL, WORM	
110	3-945-884-01	SCREW (2X5)	
111	3-971-509-42	ESCUTCHEON (A)	
112	3-971-503-03	GUIDE, SEPARETION	
113	A-7093-413-A	REEL BLOCK ASSY, T	
* 114	X-3946-402-2	BRACKET ASSY, MOTOR	
115	3-971-501-01	BELT, TN	
* 116	A-7092-969-A	PLATE BLOCK ASSY, SP MOTOR	
117	3-971-460-01	SPRING (PM), TENSION	
118	1-661-552-11	FP-700 FLEXIBLE BOARD	
119	1-500-602-11	BEAD, FERRITE	
120	A-8056-242-A	MD-40 BOARD, COMPLETE	
121	3-971-439-02	GEAR, LIMITTER	
122	4-926-219-02	RING (DIA. 2.3), RETAINING	
123	3-973-467-02	GEAR (A), PENDULUM	
124	A-7018-291-B	ARM BLOCK ASSY, PENDULUM	
125	3-973-516-01	FELT, R	
126	3-973-470-01	SLEEVE	
127	3-973-515-01	SPRING (S TENSION), COMPRESSION	
128	A-7018-290-B	REEL BLOCK ASSY, S	
129	3-701-439-21	WASHER	
* 130	3-050-965-05	HOLDER, FAN	
131	3-951-872-01	SCREW (2.6X6)	
132	3-671-893-01	CLAMP (LOW TYPE)	
133	4-640-655-01	FAN CUSHION	
M901	1-763-018-21	FAN, DC (HEAD FAN)	
* M903	A-7092-966-A	MOTOR BLOCK ASSY, REEL (RIBBON)	
M904	1-698-790-11	MOTOR, DC (STEPPING MOTOR) (PLATEN)	

(4) MECHANISM DECK SECTION-2

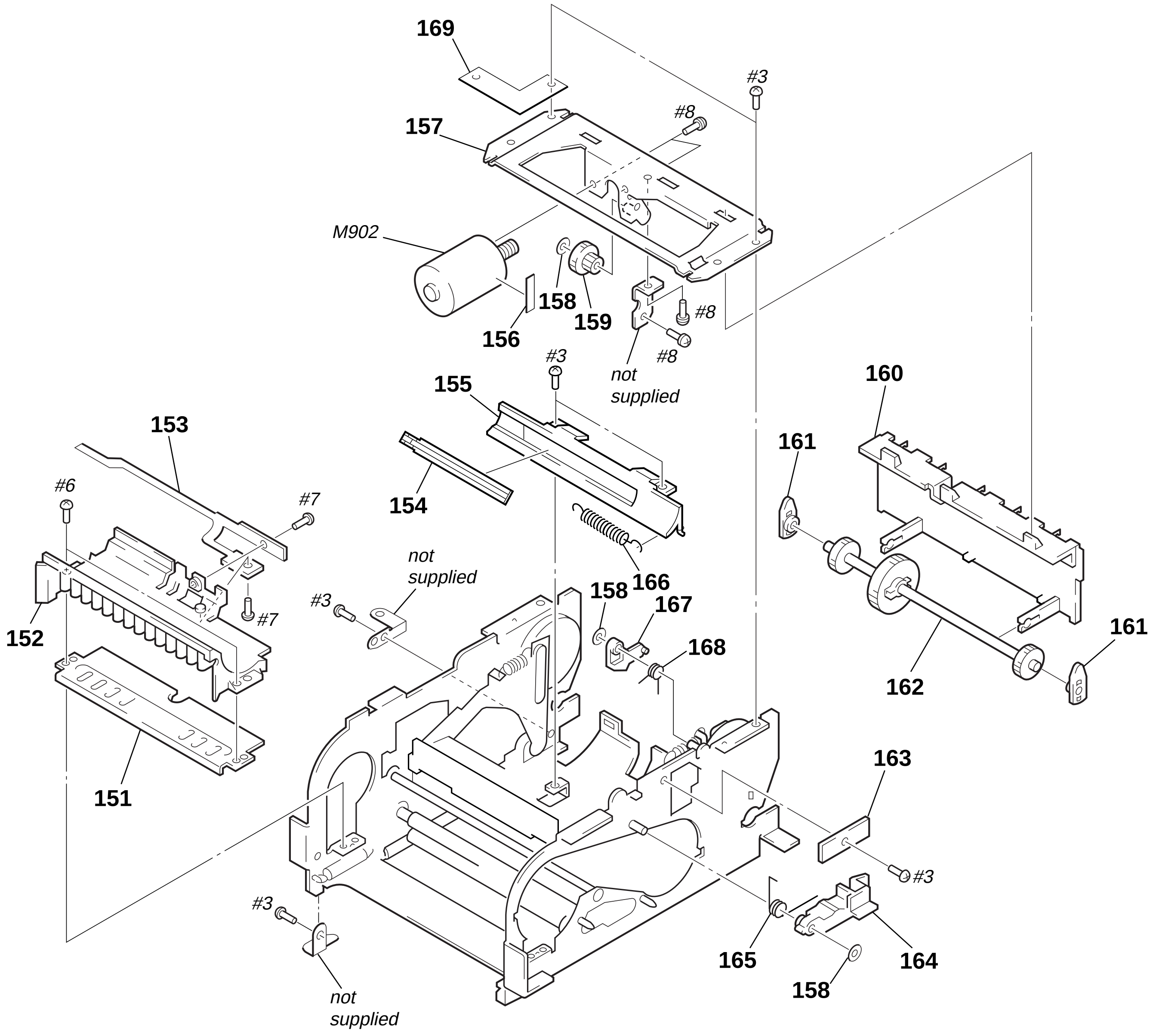

Ref. No.	Part No.	Description	Remark
151	3-971-488-02	GUIDE, PAPER	
152	3-971-484-05	GUIDE (T), CASSETTE	
153	1-661-553-11	FP-703 FLEXIBLE BOARD	
154	3-971-499-01	LEVER, EJECT	
155	3-971-498-01	GUIDE (S), CASSETTE	
156	3-847-537-11	CUSHION (5)	
* 157	X-3946-408-3	BRACKET ASSY, HM	
158	4-926-219-02	RING (DIA. 2.3), RETAINING	
159	3-971-474-01	GEAR (A), HEAD DRIVE	
160	4-642-235-01	COVER, REAR	
161	3-971-471-01	BEARING, ROLLER	
162	A-7092-963-C	GEAR BLOCK ASSY, HEAD DRIVING	
163	A-8056-244-A	RD-40 BOARD, COMPLETE	
164	3-971-486-01	LOCK, CASSETTE	
165	3-971-487-02	LOCK (SP), CASSETTE	
166	3-971-500-01	SPRING (EJ), TENSION	
167	3-971-497-01	ARM, C LOCK FIXED	
168	3-971-492-01	ARM (SP), C LOCK	
169	4-642-502-01	BRIDGE	
* M902	A-7092-967-A	MOTOR BLOCK ASSY, HEAD (HEAD UP/DOWN)	

(5) MECHANISM DECK SECTION-3

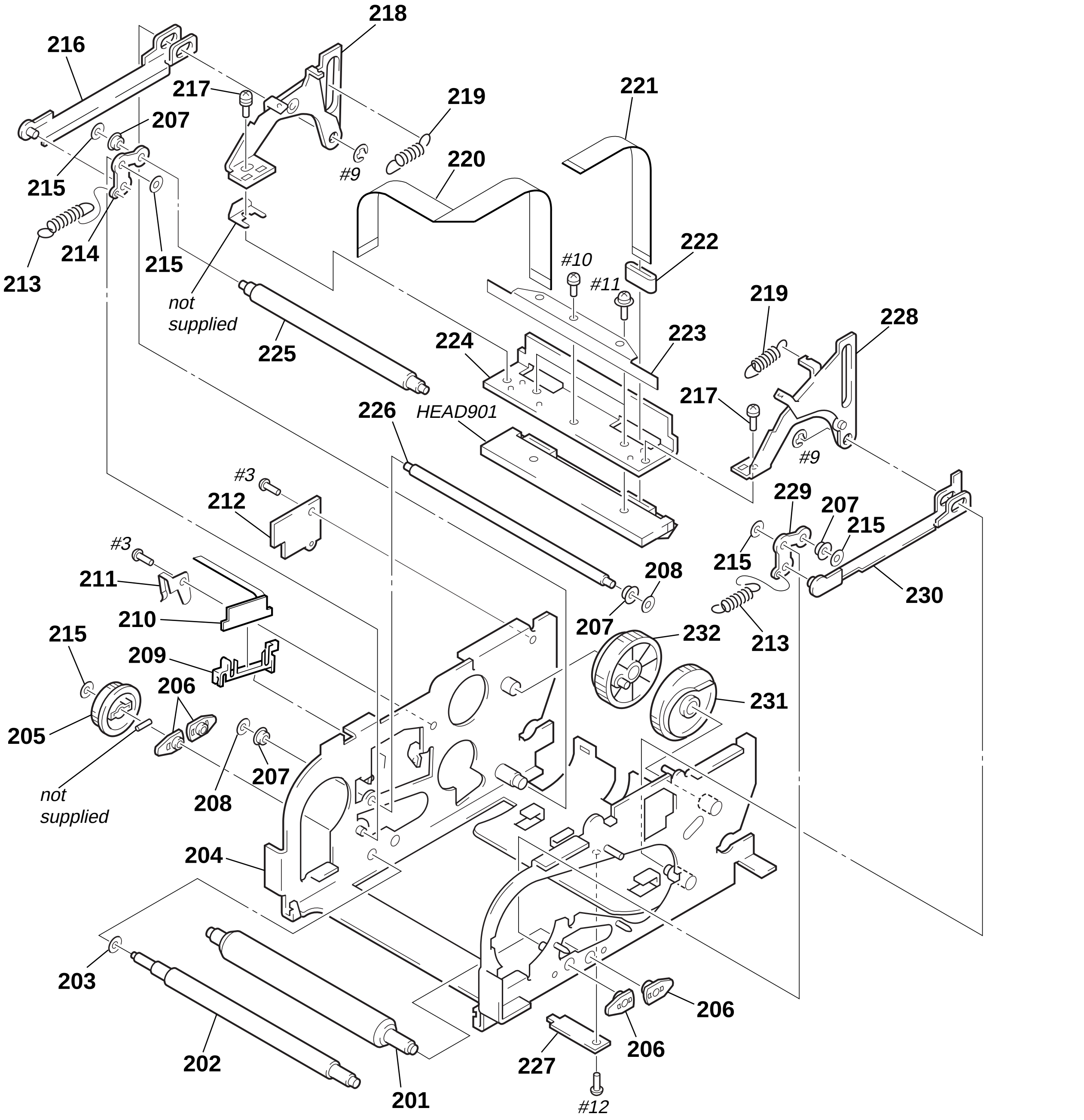

Ref. No.	Part No.	Description	Remark
201	3-971-466-01	ROLLER, PLATEN	
202	3-971-465-14	ROLLER, CAPSTAN	
203	3-701-441-11	WASHER	
* 204	X-3946-399-7	CHASSIS ASSY, MECHANICAL	
205	3-971-468-01	GEAR, CAPSTAN	
206	3-971-471-01	BEARING, ROLLER	
207	3-971-502-01	BEARING, PINCH ROLLER	
208	3-312-434-01	WASHER, SLIT	
209	3-971-496-01	HOLDER, SENSOR	
210	1-661-554-11	FP-702 FLEXIBLE BOARD	
211	3-971-495-01	SPRING, LEAF	
212	A-8056-245-A	HP-40 BOARD, COMPLETE	
213	3-971-472-01	SPRING (PINCH ROLLER), TENSION	
214	3-971-489-02	ARM (L), PINCH ROLLER	
215	4-926-219-02	RING (DIA. 2.3), RETAINING	
* 216	X-3946-412-2	ARM (L) ASSY, RELEASE	
217	3-669-607-11	+PSW (SMALL ROUND) (2.6)	
* 218	X-3946-401-1	ARM (L) ASSY, HEAD	
219	3-971-424-01	SPRING (HEAD), TENSION	
220	1-783-926-21	CABLE, FLAT (POHE13)	
221	1-783-924-11	CABLE, FLAT (ADHE13)	
222	1-500-204-11	CORE, FERRITE	
223	3-971-494-02	GUIDE, RIBBON	
224	3-971-493-02	HEAT SINK	
225	3-971-464-02	PINCH ROLLER	
226	3-971-483-02	ROLLER, GUIDE	
227	A-8056-243-A	JD-40 BOARD, COMPLETE	
* 228	X-3946-400-1	ARM (R) ASSY, HEAD	
229	3-971-490-02	ARM (R), PINCH ROLLER	
* 230	X-3946-411-2	ARM (R) ASSY, RELEASE	
* 231	X-3946-406-1	GEAR (R) ASSY, POWER	
* 232	X-3946-407-1	GEAR (L) ASSY, POWER	
HEAD901	1-500-568-11	HEAD, THERMAL	

(6) LOWER CABINET SECTION

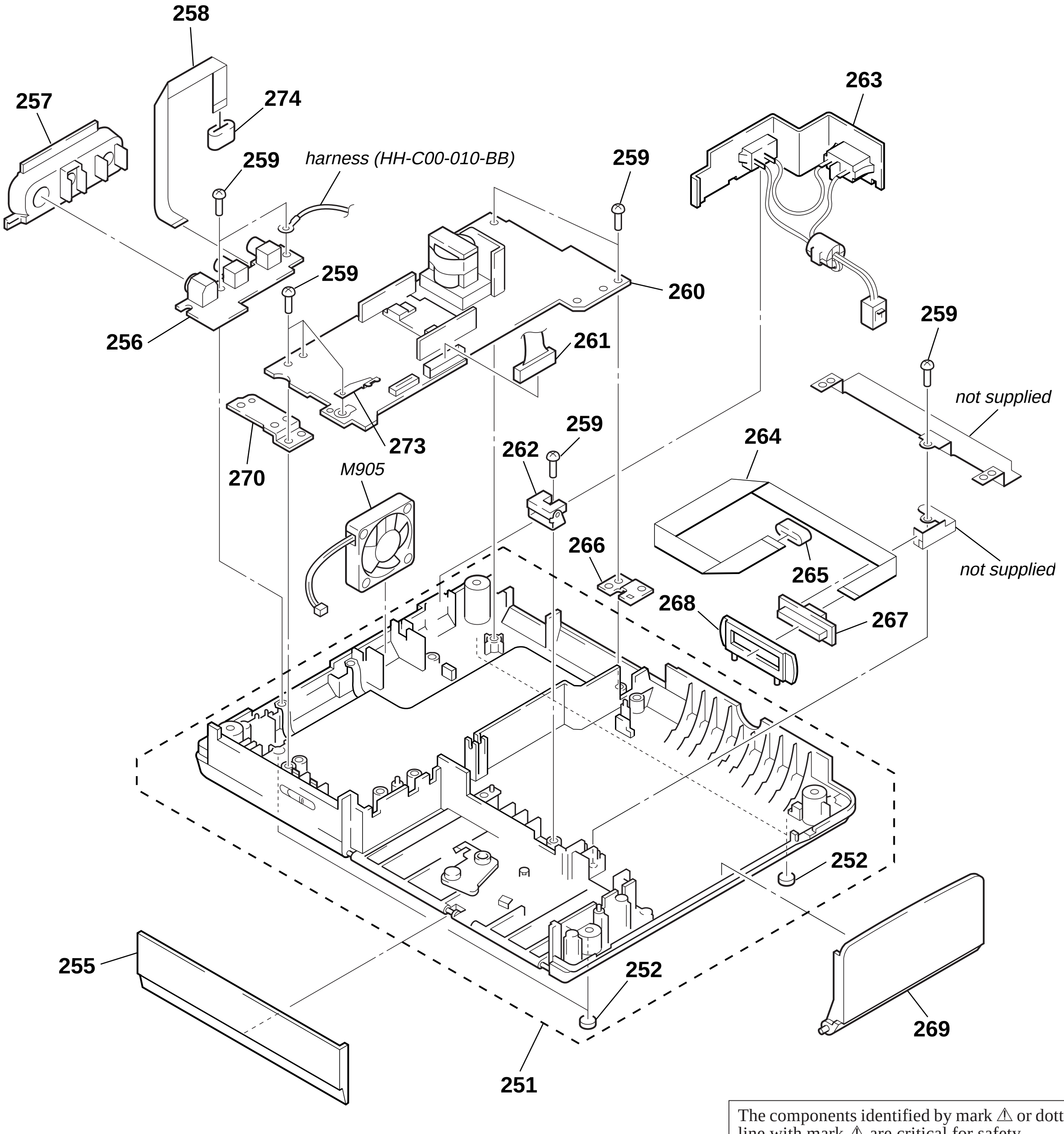

The components identified by mark ⚠ or dotted line with mark ⚠ are critical for safety. Replace only with part number specified.

Ref. No.	Part No.	Description	Remark
251	X-4622-186-3	CABINET ASSY, LOWER	
252	4-047-474-01	FOOT, RUBBER	
255	X-4622-198-1	DOOR ASSY, FRONT	
256	A-8056-233-A	VS-40 BOARD, COMPLETE	
257	4-639-931-11	COVER, VS	
258	1-790-362-31	FFC (VIVS39)	
259	3-946-346-01	SCREW (+BV) (2.6X8), TAPPING	
⚠260	1-468-364-31	REGULATOR, SWITCHING	
261	1-956-199-21	HARNESS (PS-33)	
* 262	A-7093-373-D	LEVER BLOCK ASSY, SEPARETION	
⚠263	1-473-791-71	SW BLOCK, POWER	
264	1-783-925-12	CABLE, FLAT (ADFE13)	
265	1-500-602-11	BEAD, FERRITE	
266	3-971-643-01	PLATE, GROUND	
267	A-8056-234-A	FE-40 BOARD, COMPLETE	
268	3-971-529-02	HOLDER, FE	
269	4-639-923-11	DOOR, RIBBON	
* 270	4-640-197-01	PLATE, FD GROUND	
273	4-641-239-01	PLATE, PF GROUND	
274	1-500-277-41	BEAD, FERRITE	
M905	1-763-018-21	FAN, DC (POWER FAN)	

SECTION 7
ELECTRICAL PARTS LIST

DK-40

NOTE:
- Due to standardization, replacements in the parts list may be different from the parts specified in the diagrams or the components used on the set.
- -XX and -X mean standardized parts, so they may have some difference from the original one.
- RESISTORS
  All resistors are in ohms.
  METAL: Metal-film resistor.
  METAL OXIDE: Metal oxide-film resistor.
  F: nonflammable
- Items marked "*" are not stocked since they are seldom required for routine service.
  Some delay should be anticipated when ordering these items.
- SEMICONDUCTORS
  In each case, u: μ, for example:
  uA. . : μA. . uPA. . : μPA. .
  uPB. . : μPB. . uPC. . : μPC. .
  uPD. . : μPD. .
- CAPACITORS
  uF: μF
- COILS
  uH: μH

The components identified by mark ⚠ or dotted line with mark ⚠ are critical for safety.
Replace only with part number specified.

When indicating parts by reference number, please include the board.

Ref. No.	Part No.	Description			Remark
	A-8056-238-A	DK-40 BOARD, COMPLETE			
		**********************			
		< BUZZER >			
BZ201	1-529-080-11	BUZZER, PIEZOELECTRIC			
		< CAPACITOR >			
C001	1-162-970-91	CERAMIC CHIP	0.01uF	10%	25V
C002	1-162-970-91	CERAMIC CHIP	0.01uF	10%	25V
C005	1-164-156-91	CERAMIC CHIP	0.1uF		25V
C400	1-126-206-21	ELECT CHIP	100uF	20%	6.3V
C401	1-164-156-91	CERAMIC CHIP	0.1uF		25V
C402	1-124-778-21	ELECT CHIP	22uF	20%	6.3V
C403	1-162-928-91	CERAMIC CHIP	120PF	5%	50V
C404	1-164-315-91	CERAMIC CHIP	470PF	5%	50V
C405	1-164-156-91	CERAMIC CHIP	0.1uF		25V
C406	1-164-156-91	CERAMIC CHIP	0.1uF		25V
C407	1-164-156-91	CERAMIC CHIP	0.1uF		25V
C408	1-126-206-21	ELECT CHIP	100uF	20%	6.3V
C409	1-107-826-91	CERAMIC CHIP	0.1uF	10%	16V
C410	1-164-156-91	CERAMIC CHIP	0.1uF		25V
C411	1-126-193-21	ELECT CHIP	1uF	20%	50V
C412	1-162-927-91	CERAMIC CHIP	100PF	5%	50V
C413	1-107-826-91	CERAMIC CHIP	0.1uF	10%	16V
C414	1-162-968-91	CERAMIC CHIP	0.0047uF	10%	50V
C415	1-162-927-91	CERAMIC CHIP	100PF	5%	50V
C416	1-162-927-91	CERAMIC CHIP	100PF	5%	50V
C417	1-109-982-91	CERAMIC CHIP	1uF	10%	10V
C418	1-164-156-91	CERAMIC CHIP	0.1uF		25V
C419	1-124-778-21	ELECT CHIP	22uF	20%	6.3V
C420	1-135-150-91	TANTALUM CHIP	3.3uF	20%	6.3V
C421	1-109-982-91	CERAMIC CHIP	1uF	10%	10V
C422	1-109-982-91	CERAMIC CHIP	1uF	10%	10V
C423	1-124-778-21	ELECT CHIP	22uF	20%	6.3V
C424	1-162-967-91	CERAMIC CHIP	0.0033uF	10%	50V
C425	1-164-237-91	CERAMIC CHIP	16PF	5%	50V
C426	1-162-970-91	CERAMIC CHIP	0.01uF	10%	25V
C427	1-164-816-91	CERAMIC CHIP	220PF	2%	50V
C428	1-115-414-91	CERAMIC CHIP	820PF	5%	25V
C429	1-164-378-91	CERAMIC CHIP	30PF	5%	50V
C431	1-164-156-91	CERAMIC CHIP	0.1uF		25V
C432	1-164-156-91	CERAMIC CHIP	0.1uF		25V
C433	1-124-778-21	ELECT CHIP	22uF	20%	6.3V
C434	1-164-505-91	CERAMIC CHIP	2.2uF		16V
C435	1-164-156-91	CERAMIC CHIP	0.1uF		25V
C436	1-124-778-21	ELECT CHIP	22uF	20%	6.3V
C437	1-126-206-21	ELECT CHIP	100uF	20%	6.3V
C438	1-126-206-21	ELECT CHIP	100uF	20%	6.3V
C439	1-165-128-91	CERAMIC CHIP	0.22uF		16V
C440	1-164-346-91	CERAMIC CHIP	1uF		16V
C441	1-165-128-91	CERAMIC CHIP	0.22uF		16V
C442	1-165-128-91	CERAMIC CHIP	0.22uF		16V
C443	1-165-128-91	CERAMIC CHIP	0.22uF		16V
C444	1-165-128-91	CERAMIC CHIP	0.22uF		16V
C445	1-164-346-91	CERAMIC CHIP	1uF		16V
C446	1-165-128-91	CERAMIC CHIP	0.22uF		16V
C447	1-165-128-91	CERAMIC CHIP	0.22uF		16V
C448	1-164-156-91	CERAMIC CHIP	0.1uF		25V
C449	1-165-128-91	CERAMIC CHIP	0.22uF		16V
C450	1-165-128-91	CERAMIC CHIP	0.22uF		16V
C451	1-165-128-91	CERAMIC CHIP	0.22uF		16V
C452	1-165-128-91	CERAMIC CHIP	0.22uF		16V
C453	1-165-128-91	CERAMIC CHIP	0.22uF		16V
C455	1-162-919-91	CERAMIC CHIP	22PF	5%	50V
C456	1-165-128-91	CERAMIC CHIP	0.22uF		16V
C457	1-165-128-91	CERAMIC CHIP	0.22uF		16V
C460	1-162-966-91	CERAMIC CHIP	0.0022uF	10%	50V
C461	1-124-779-21	ELECT CHIP	10uF	20%	16V
C462	1-164-156-91	CERAMIC CHIP	0.1uF		25V
C464	1-162-919-91	CERAMIC CHIP	22PF	5%	50V
C466	1-164-346-91	CERAMIC CHIP	1uF		16V
C468	1-164-156-91	CERAMIC CHIP	0.1uF		25V
C469	1-164-156-91	CERAMIC CHIP	0.1uF		25V
C470	1-164-156-91	CERAMIC CHIP	0.1uF		25V
C473	1-164-156-91	CERAMIC CHIP	0.1uF		25V
C474	1-104-913-91	TANTALUM CHIP	10uF	20%	16V
C500	1-162-923-91	CERAMIC CHIP	47PF	5%	50V
C501	1-115-156-91	CERAMIC CHIP	1uF		10V
C502	1-164-156-91	CERAMIC CHIP	0.1uF		25V
C503	1-124-779-21	ELECT CHIP	10uF	20%	16V
C504	1-164-156-91	CERAMIC CHIP	0.1uF		25V
C505	1-115-156-91	CERAMIC CHIP	1uF		10V
C507	1-164-156-91	CERAMIC CHIP	0.1uF		25V
C508	1-164-156-91	CERAMIC CHIP	0.1uF		25V
C509	1-164-156-91	CERAMIC CHIP	0.1uF		25V
C510	1-164-156-91	CERAMIC CHIP	0.1uF		25V
C511	1-164-156-91	CERAMIC CHIP	0.1uF		25V

DK-40

Ref. No.	Part No.	Description			Remark
C512	1-115-156-91	CERAMIC CHIP	1uF		10V
C513	1-164-156-91	CERAMIC CHIP	0.1uF		25V
C514	1-124-778-21	ELECT CHIP	22uF	20%	6.3V
C515	1-115-156-91	CERAMIC CHIP	1uF		10V
C516	1-164-156-91	CERAMIC CHIP	0.1uF		25V
C517	1-164-156-91	CERAMIC CHIP	0.1uF		25V
C518	1-115-156-91	CERAMIC CHIP	1uF		10V
C519	1-164-156-91	CERAMIC CHIP	0.1uF		25V
C520	1-164-156-91	CERAMIC CHIP	0.1uF		25V
C521	1-164-156-91	CERAMIC CHIP	0.1uF		25V
C522	1-164-156-91	CERAMIC CHIP	0.1uF		25V
C523	1-164-156-91	CERAMIC CHIP	0.1uF		25V
C524	1-164-156-91	CERAMIC CHIP	0.1uF		25V
C525	1-164-156-91	CERAMIC CHIP	0.1uF		25V
C526	1-104-913-91	TANTALUM CHIP	10uF	20%	16V
C528	1-164-156-91	CERAMIC CHIP	0.1uF		25V
C529	1-164-156-91	CERAMIC CHIP	0.1uF		25V
C531	1-164-156-91	CERAMIC CHIP	0.1uF		25V
C534	1-124-778-21	ELECT CHIP	22uF	20%	6.3V
C536	1-164-156-91	CERAMIC CHIP	0.1uF		25V
C537	1-162-966-91	CERAMIC CHIP	0.0022uF	10%	50V
C538	1-162-966-91	CERAMIC CHIP	0.0022uF	10%	50V
C543	1-162-964-91	CERAMIC CHIP	0.001uF	10%	50V
C544	1-162-966-91	CERAMIC CHIP	0.0022uF	10%	50V
C545	1-162-966-91	CERAMIC CHIP	0.0022uF	10%	50V
C546	1-124-779-21	ELECT CHIP	10uF	20%	16V
C548	1-124-778-21	ELECT CHIP	22uF	20%	6.3V
C549	1-164-160-91	CERAMIC CHIP	20PF	5%	50V
C553	1-164-156-91	CERAMIC CHIP	0.1uF		25V
C554	1-164-156-91	CERAMIC CHIP	0.1uF		25V
C555	1-164-156-91	CERAMIC CHIP	0.1uF		25V
C556	1-164-156-91	CERAMIC CHIP	0.1uF		25V
C563	1-164-156-91	CERAMIC CHIP	0.1uF		25V
C564	1-164-156-91	CERAMIC CHIP	0.1uF		25V
C576	1-162-919-91	CERAMIC CHIP	22PF	5%	50V
C604	1-164-315-91	CERAMIC CHIP	470PF	5%	50V
C605	1-164-156-91	CERAMIC CHIP	0.1uF		25V
C701	1-164-156-91	CERAMIC CHIP	0.1uF		25V
C702	1-164-156-91	CERAMIC CHIP	0.1uF		25V
C703	1-164-156-91	CERAMIC CHIP	0.1uF		25V
C704	1-164-156-91	CERAMIC CHIP	0.1uF		25V
C705	1-164-156-91	CERAMIC CHIP	0.1uF		25V
C706	1-162-927-91	CERAMIC CHIP	100PF	5%	50V
C707	1-164-156-91	CERAMIC CHIP	0.1uF		25V
C708	1-164-156-91	CERAMIC CHIP	0.1uF		25V
C709	1-162-927-91	CERAMIC CHIP	100PF	5%	50V
C715	1-126-206-21	ELECT CHIP	100uF	20%	6.3V
C716	1-162-964-91	CERAMIC CHIP	0.001uF	10%	50V
C721	1-164-156-91	CERAMIC CHIP	0.1uF		25V
C722	1-124-778-21	ELECT CHIP	22uF	20%	6.3V
C723	1-164-156-91	CERAMIC CHIP	0.1uF		25V
C903	1-164-156-91	CERAMIC CHIP	0.1uF		25V
C905	1-126-205-21	ELECT CHIP	47uF	20%	6.3V
C906	1-164-156-91	CERAMIC CHIP	0.1uF		25V
C907	1-124-779-21	ELECT CHIP	10uF	20%	16V

Ref. No.	Part No.	Description	Remark
		< CONNECTOR >	
CN401	1-770-703-11	CONNECTOR, FFC/FPC 20P	
* CN402	1-580-055-41	PIN, CONNECTOR (SMD) 2P	
CN501	1-778-544-21	CONNECTOR, FFC/FPC (ZIF) 30P	
CN502	1-778-622-21	CONNECTOR, FFC/FPC 10P	
CN503	1-785-468-11	CONNECTOR, FFC/FPC 13P	
CN504	1-774-287-11	CONNECTOR, FFC/FPC 22P	
* CN551	1-691-551-21	PIN, CONNECTOR (SMD) 8P	
CN701	1-774-287-11	CONNECTOR, FFC/FPC 22P	
CN702	1-770-698-11	CONNECTOR, FFC/FPC 15P	
CN703	1-785-469-11	CONNECTOR, FFC/FPC 30P	
		< TRIMMER >	
CT401	1-141-367-51	CAP, CHIP TRIMMER 20PF	
CT500	1-141-368-51	CAP, CHIP TRIMMER 30PF	
		< DIODE >	
D400	8-719-067-40	DIODE STZ6.8N-T146	
D401	8-719-060-48	DIODE RB751V-40TE-17	
D402	8-713-101-94	DIODE 1T363A-M20-T8A	
D513	8-719-988-61	DIODE 1SS355TE-17	
D601	8-719-066-17	DIODE FTZ6.8E-T148	
D603	8-719-067-40	DIODE STZ6.8N-T146	
D604	8-719-066-17	DIODE FTZ6.8E-T148	
D696	8-719-941-84	DIODE DA204UT106	
D697	8-719-941-84	DIODE DA204UT106	
D701	8-719-071-29	LED AA1101F-TR (PC CARD)	
D702	8-719-071-29	LED AA1101F-TR (MEMORY STICK)	
D710	8-719-404-50	DIODE MA111-TX	
		< FERRITE BEAD/COIL >	
FB407	1-500-288-21	FERRITE 0uH	
* FB408	1-543-959-22	FERRITE 0uH	
FB409	1-500-245-22	FERRITE 0uH	
FB410	1-500-245-22	FERRITE 0uH	
FB414	1-500-245-22	FERRITE 0uH	
FB415	1-500-245-22	FERRITE 0uH	
FB500	1-414-595-21	INDUCTOR CHIP 0uH	
FB501	1-500-288-21	FERRITE 0uH	
FB502	1-500-238-22	FERRITE 0uH	
FB504	1-500-288-21	FERRITE 0uH	
FB505	1-500-238-22	FERRITE 0uH	
FB506	1-500-288-21	FERRITE 0uH	
FB507	1-500-238-22	FERRITE 0uH	
FB508	1-500-238-22	FERRITE 0uH	
FB509	1-500-238-22	FERRITE 0uH	
FB510	1-500-238-22	FERRITE 0uH	
FB511	1-500-238-22	FERRITE 0uH	
FB512	1-500-238-22	FERRITE 0uH	
FB513	1-500-238-22	FERRITE 0uH	
FB514	1-500-238-22	FERRITE 0uH	
FB515	1-500-238-22	FERRITE 0uH	
FB516	1-500-238-22	FERRITE 0uH	
FB517	1-500-238-22	FERRITE 0uH	
FB518	1-500-238-22	FERRITE 0uH	
FB519	1-500-238-22	FERRITE 0uH	
FB520	1-500-238-22	FERRITE 0uH	

Ref. No.	Part No.	Description		Remark
FB523	1-500-238-22	FERRITE	0uH	
FB524	1-500-238-22	FERRITE	0uH	
FB525	1-500-238-22	FERRITE	0uH	
FB532	1-500-238-22	FERRITE	0uH	
FB533	1-500-238-22	FERRITE	0uH	
FB534	1-500-238-22	FERRITE	0uH	
FB535	1-500-238-22	FERRITE	0uH	
FB536	1-500-238-22	FERRITE	0uH	
FB537	1-500-238-22	FERRITE	0uH	
FB538	1-500-238-22	FERRITE	0uH	
FB539	1-500-238-22	FERRITE	0uH	
FB540	1-500-238-22	FERRITE	0uH	
FB541	1-500-238-22	FERRITE	0uH	
FB542	1-500-238-22	FERRITE	0uH	
FB543	1-500-238-22	FERRITE	0uH	
FB545	1-500-288-21	FERRITE	0uH	
FB555	1-500-242-22	FERRITE	0uH	
FB556	1-500-242-22	FERRITE	0uH	
FB561	1-500-242-22	FERRITE	0uH	
FB562	1-500-242-22	FERRITE	0uH	
FB563	1-500-242-22	FERRITE	0uH	
FB565	1-500-242-22	FERRITE	0uH	
FB566	1-500-242-22	FERRITE	0uH	
FB576	1-414-595-21	INDUCTOR CHIP	0uH	
FB580	1-500-242-22	FERRITE	0uH	
FB582	1-500-242-22	FERRITE	0uH	
FB591	1-500-238-22	FERRITE	0uH	
FB592	1-500-238-22	FERRITE	0uH	
FB593	1-500-238-22	FERRITE	0uH	
FB594	1-500-238-22	FERRITE	0uH	
FB595	1-500-238-22	FERRITE	0uH	
FB596	1-500-238-22	FERRITE	0uH	
FB597	1-500-238-22	FERRITE	0uH	
FB700	1-500-238-22	FERRITE	0uH	
FB701	1-500-242-22	FERRITE	0uH	
FB702	1-500-242-22	FERRITE	0uH	
FB703	1-500-288-21	FERRITE	0uH	
FB2000	1-500-238-22	FERRITE	0uH	
FB2001	1-500-238-22	FERRITE	0uH	
FB2002	1-500-238-22	FERRITE	0uH	
FB2003	1-500-238-22	FERRITE	0uH	
FB2004	1-500-238-22	FERRITE	0uH	
		< IC >		
IC401	8-759-987-20	IC	CXD1229Q	
IC402	8-759-058-58	IC	TC7S04FU (TE85R)	
IC403	8-759-553-57	IC	MSM5118160B-60JS-R1	
IC404	8-759-460-74	IC	BA05FP-E2	
IC406	8-759-083-95	IC	TC7W74FU (TE12R)	
IC407	8-759-421-81	IC	F432301PGF	
IC501	8-759-542-91	IC	S-80840ANUP-ED4-T2	
IC502	8-759-234-42	IC	TC7S08F (TE85R)	
IC503	8-759-638-32	IC	HD6437045E18F	
IC504	8-759-460-74	IC	BA05FP-E2	
IC505	8-759-445-92	IC	HG51BS263AFB	
IC506	8-759-596-56	IC	LC372500PTS-K06	
IC508	8-759-276-28	IC	LM393PS-E20	
IC509	8-759-578-84	IC	KM416C4104BS-6T	

Ref. No.	Part No.	Description				Remark
IC510	8-759-234-42	IC	TC7S08F (TE85R)			
IC511	8-759-058-64	IC	TC7S32FU (TE85R)			
IC513	8-759-185-70	IC	TC74VHC32F (EL)			
IC514	8-759-083-95	IC	TC7W74FU (TE12R)			
IC515	8-759-058-58	IC	TC7S04FU (TE85R)			
IC701	8-759-256-36	IC	HD74LS244FPEL			
IC702	8-759-535-97	IC	HD74LS374FP-EL			
IC703	8-759-287-83	IC	SN74HC74ANSR			
IC704	8-759-267-92	IC	SN74HC04ANSR			
IC705	8-759-267-88	IC	SN74HC02ANSR			
IC911	8-759-259-77	IC	PQ20VZ5U			
		< COIL >				
L402	1-412-067-21	INDUCTOR CHIP	330uH			
L403	1-410-377-41	INDUCTOR CHIP	4.7uH			
L406	1-412-064-21	INDUCTOR CHIP	100uH			
L410	1-412-006-21	INDUCTOR CHIP	10uH			
L2000	1-414-194-21	INDUCTOR	33uH			
		< TRANSISTOR >				
Q401	8-729-421-69	TRANSISTOR	2SB709A-R-TX			
Q402	8-729-402-85	TRANSISTOR	XN4601-TW			
Q403	8-729-402-85	TRANSISTOR	XN4601-TW			
Q404	8-729-402-85	TRANSISTOR	XN4601-TW			
Q405	8-729-901-80	TRANSISTOR	2SC2412K-T-146-Q			
Q406	8-729-901-80	TRANSISTOR	2SC2412K-T-146-Q			
Q407	8-729-901-80	TRANSISTOR	2SC2412K-T-146-Q			
Q408	8-729-901-80	TRANSISTOR	2SC2412K-T-146-Q			
Q409	8-729-901-80	TRANSISTOR	2SC2412K-T-146-Q			
Q410	8-729-901-80	TRANSISTOR	2SC2412K-T-146-Q			
Q411	8-729-402-85	TRANSISTOR	XN4601-TW			
Q412	8-729-402-85	TRANSISTOR	XN4601-TW			
Q413	8-729-402-85	TRANSISTOR	XN4601-TW			
Q416	8-729-421-69	TRANSISTOR	2SB709A-R-TX			
Q701	8-729-901-80	TRANSISTOR	2SC2412K-T-146-Q			
Q702	8-729-037-60	TRANSISTOR	UN9112J-(TX).SO			
Q703	8-729-037-73	TRANSISTOR	UN9212J-(TX).SO			
Q704	8-729-037-60	TRANSISTOR	UN9112J-(TX).SO			
Q902	8-729-037-60	TRANSISTOR	UN9112J-(TX).SO			
Q903	8-729-037-60	TRANSISTOR	UN9112J-(TX).SO			
Q906	8-729-620-08	TRANSISTOR	2SC3052EF-T2-LEF			
Q2000	8-729-027-59	TRANSISTOR	DTC144EKA-T146			
		< RESISTOR >				
R001	1-216-833-91	RES, CHIP	10K	5%	1/16W	
R002	1-216-833-91	RES, CHIP	10K	5%	1/16W	
R003	1-216-837-91	RES, CHIP	22K	5%	1/16W	
R004	1-216-837-91	RES, CHIP	22K	5%	1/16W	
R005	1-216-849-91	RES, CHIP	220K	5%	1/16W	
R006	1-216-841-91	RES, CHIP	47K	5%	1/16W	
R009	1-216-849-91	RES, CHIP	220K	5%	1/16W	
R010	1-216-841-91	RES, CHIP	47K	5%	1/16W	
R301	1-216-809-91	RES, CHIP	100	5%	1/16W	
R302	1-216-817-91	RES, CHIP	470	5%	1/16W	
R303	1-216-817-91	RES, CHIP	470	5%	1/16W	
R304	1-218-855-91	RES, CHIP	2.2K	0.5%	1/16W	
R305	1-218-855-91	RES, CHIP	2.2K	0.5%	1/16W	
R311	1-216-821-91	RES, CHIP	1K	5%	1/16W	

DK-40

Ref. No.	Part No.	Description			Remark
R315	1-216-821-91	RES, CHIP	1K	5%	1/16W
R318	1-216-821-91	RES, CHIP	1K	5%	1/16W
R319	1-216-821-91	RES, CHIP	1K	5%	1/16W
R322	1-216-813-91	RES, CHIP	220	5%	1/16W
R399	1-216-864-91	SHORT	0		
R401	1-216-821-91	RES, CHIP	1K	5%	1/16W
R402	1-216-817-91	RES, CHIP	470	5%	1/16W
R403	1-216-821-91	RES, CHIP	1K	5%	1/16W
R404	1-216-821-91	RES, CHIP	1K	5%	1/16W
R405	1-216-833-91	RES, CHIP	10K	5%	1/16W
R406	1-216-838-91	RES, CHIP	27K	5%	1/16W
R407	1-216-833-91	RES, CHIP	10K	5%	1/16W
R408	1-216-838-91	RES, CHIP	27K	5%	1/16W
R409	1-216-834-91	RES, CHIP	12K	5%	1/16W
R410	1-216-841-91	RES, CHIP	47K	5%	1/16W
R412	1-216-864-91	SHORT	0		
R413	1-216-825-91	RES, CHIP	2.2K	5%	1/16W
R414	1-216-806-91	RES, CHIP	56	5%	1/16W
R416	1-216-864-91	SHORT	0		
R417	1-216-817-91	RES, CHIP	470	5%	1/16W
R418	1-216-821-91	RES, CHIP	1K	5%	1/16W
R419	1-216-821-91	RES, CHIP	1K	5%	1/16W
R420	1-216-817-91	RES, CHIP	470	5%	1/16W
R421	1-216-823-91	RES, CHIP	1.5K	5%	1/16W
R422	1-216-817-91	RES, CHIP	470	5%	1/16W
R423	1-216-821-91	RES, CHIP	1K	5%	1/16W
R424	1-216-813-91	RES, CHIP	220	5%	1/16W
R425	1-216-813-91	RES, CHIP	220	5%	1/16W
R426	1-216-813-91	RES, CHIP	220	5%	1/16W
R427	1-216-821-91	RES, CHIP	1K	5%	1/16W
R428	1-216-813-91	RES, CHIP	220	5%	1/16W
R429	1-216-813-91	RES, CHIP	220	5%	1/16W
R430	1-216-825-91	RES, CHIP	2.2K	5%	1/16W
R431	1-216-806-91	RES, CHIP	56	5%	1/16W
R432	1-216-813-91	RES, CHIP	220	5%	1/16W
R433	1-216-813-91	RES, CHIP	220	5%	1/16W
R434	1-216-811-91	RES, CHIP	150	5%	1/16W
R435	1-216-855-91	RES, CHIP	680K	5%	1/16W
R436	1-216-825-91	RES, CHIP	2.2K	5%	1/16W
R437	1-216-821-91	RES, CHIP	1K	5%	1/16W
R438	1-216-825-91	RES, CHIP	2.2K	5%	1/16W
R439	1-216-825-91	RES, CHIP	2.2K	5%	1/16W
R440	1-216-839-91	RES, CHIP	33K	5%	1/16W
R441	1-216-839-91	RES, CHIP	33K	5%	1/16W
R442	1-216-833-91	RES, CHIP	10K	5%	1/16W
R444	1-216-833-91	RES, CHIP	10K	5%	1/16W
R446	1-216-833-91	RES, CHIP	10K	5%	1/16W
R447	1-216-809-91	RES, CHIP	100	5%	1/16W
R448	1-216-833-91	RES, CHIP	10K	5%	1/16W
R449	1-216-839-91	RES, CHIP	33K	5%	1/16W
R450	1-216-833-91	RES, CHIP	10K	5%	1/16W
R451	1-216-816-91	RES, CHIP	390	5%	1/16W
R452	1-216-821-91	RES, CHIP	1K	5%	1/16W
R453	1-216-821-91	RES, CHIP	1K	5%	1/16W
R454	1-216-850-91	RES, CHIP	270K	5%	1/16W
R455	1-216-809-91	RES, CHIP	100	5%	1/16W
R456	1-218-844-91	RES, CHIP	750	0.5%	1/16W
R457	1-218-855-91	RES, CHIP	2.2K	0.5%	1/16W
R458	1-218-855-91	RES, CHIP	2.2K	0.5%	1/16W
R459	1-216-809-91	RES, CHIP	100	5%	1/16W
R460	1-216-817-91	RES, CHIP	470	5%	1/16W
R461	1-216-821-91	RES, CHIP	1K	5%	1/16W
R462	1-216-839-91	RES, CHIP	33K	5%	1/16W
R463	1-216-817-91	RES, CHIP	470	5%	1/16W
R464	1-216-809-91	RES, CHIP	100	5%	1/16W
R465	1-216-806-91	RES, CHIP	56	5%	1/16W
R466	1-216-806-91	RES, CHIP	56	5%	1/16W
R467	1-216-845-91	RES, CHIP	100K	5%	1/16W
R468	1-216-826-91	RES, CHIP	2.7K	5%	1/16W
R469	1-216-809-91	RES, CHIP	100	5%	1/16W
R470	1-218-852-91	RES, CHIP	1.6K	0.5%	1/16W
R471	1-218-830-91	RES, CHIP	200	0.5%	1/16W
R472	1-218-852-91	RES, CHIP	1.6K	0.5%	1/16W
R473	1-218-830-91	RES, CHIP	200	0.5%	1/16W
R474	1-216-821-91	RES, CHIP	1K	5%	1/16W
R475	1-218-852-91	RES, CHIP	1.6K	0.5%	1/16W
R476	1-218-830-91	RES, CHIP	200	0.5%	1/16W
R477	1-216-841-91	RES, CHIP	47K	5%	1/16W
R478	1-216-821-91	RES, CHIP	1K	5%	1/16W
R479	1-216-820-91	RES, CHIP	820	5%	1/16W
R480	1-216-820-91	RES, CHIP	820	5%	1/16W
R481	1-216-809-91	RES, CHIP	100	5%	1/16W
R482	1-216-809-91	RES, CHIP	100	5%	1/16W
R483	1-216-813-91	RES, CHIP	220	5%	1/16W
R486	1-216-864-91	SHORT	0		
R487	1-216-823-91	RES, CHIP	1.5K	5%	1/16W
R488	1-216-809-91	RES, CHIP	100	5%	1/16W
R490	1-216-821-91	RES, CHIP	1K	5%	1/16W
R491	1-216-864-91	SHORT	0		
R492	1-216-821-91	RES, CHIP	1K	5%	1/16W
R493	1-216-809-91	RES, CHIP	100	5%	1/16W
R494	1-216-809-91	RES, CHIP	100	5%	1/16W
R495	1-216-157-91	RES, CHIP	20	5%	1/8W
R496	1-216-157-91	RES, CHIP	20	5%	1/8W
R497	1-216-864-91	SHORT	0		
R498	1-216-864-91	SHORT	0		
R499	1-216-864-91	SHORT	0		
R500	1-216-809-91	RES, CHIP	100	5%	1/16W
R502	1-216-809-91	RES, CHIP	100	5%	1/16W
R503	1-216-809-91	RES, CHIP	100	5%	1/16W
R504	1-216-809-91	RES, CHIP	100	5%	1/16W
R505	1-216-853-91	RES, CHIP	470K	5%	1/16W
R506	1-216-809-91	RES, CHIP	100	5%	1/16W
R507	1-216-809-91	RES, CHIP	100	5%	1/16W
R509	1-216-857-91	RES, CHIP	1M	5%	1/16W
R510	1-216-809-91	RES, CHIP	100	5%	1/16W
R512	1-216-864-91	SHORT	0		
R513	1-216-809-91	RES, CHIP	100	5%	1/16W
R514	1-216-841-91	RES, CHIP	47K	5%	1/16W
R515	1-216-833-91	RES, CHIP	10K	5%	1/16W
R518	1-216-836-91	RES, CHIP	18K	5%	1/16W
R519	1-216-809-91	RES, CHIP	100	5%	1/16W
R520	1-216-809-91	RES, CHIP	100	5%	1/16W
R521	1-216-853-91	RES, CHIP	470K	5%	1/16W
R522	1-216-809-91	RES, CHIP	100	5%	1/16W

Ref. No.	Part No.	Description			Remark
R523	1-216-809-91	RES, CHIP	100	5%	1/16W
R524	1-216-841-91	RES, CHIP	47K	5%	1/16W
R525	1-216-809-91	RES, CHIP	100	5%	1/16W
R527	1-216-809-91	RES, CHIP	100	5%	1/16W
R528	1-216-809-91	RES, CHIP	100	5%	1/16W
R529	1-216-809-91	RES, CHIP	100	5%	1/16W
R532	1-216-809-91	RES, CHIP	100	5%	1/16W
R533	1-216-809-91	RES, CHIP	100	5%	1/16W
R534	1-216-809-91	RES, CHIP	100	5%	1/16W
R535	1-216-833-91	RES, CHIP	10K	5%	1/16W
R536	1-216-809-91	RES, CHIP	100	5%	1/16W
R537	1-216-813-91	RES, CHIP	220	5%	1/16W
R538	1-218-852-91	RES, CHIP	1.6K	0.5%	1/16W
R540	1-216-809-91	RES, CHIP	100	5%	1/16W
R542	1-216-809-91	RES, CHIP	100	5%	1/16W
R544	1-216-809-91	RES, CHIP	100	5%	1/16W
R546	1-216-809-91	RES, CHIP	100	5%	1/16W
R549	1-218-839-91	RES, CHIP	470	0.5%	1/16W
R550	1-216-826-91	RES, CHIP	2.7K	5%	1/16W
R554	1-216-809-91	RES, CHIP	100	5%	1/16W
R563	1-216-809-91	RES, CHIP	100	5%	1/16W
R566	1-216-809-91	RES, CHIP	100	5%	1/16W
R567	1-216-809-91	RES, CHIP	100	5%	1/16W
R571	1-216-833-91	RES, CHIP	10K	5%	1/16W
R572	1-216-809-91	RES, CHIP	100	5%	1/16W
R574	1-216-809-91	RES, CHIP	100	5%	1/16W
R575	1-216-809-91	RES, CHIP	100	5%	1/16W
R576	1-216-809-91	RES, CHIP	100	5%	1/16W
R579	1-216-809-91	RES, CHIP	100	5%	1/16W
R580	1-216-809-91	RES, CHIP	100	5%	1/16W
R581	1-216-821-91	RES, CHIP	1K	5%	1/16W
R582	1-216-821-91	RES, CHIP	1K	5%	1/16W
R583	1-216-821-91	RES, CHIP	1K	5%	1/16W
R584	1-216-821-91	RES, CHIP	1K	5%	1/16W
R587	1-216-809-91	RES, CHIP	100	5%	1/16W
R593	1-216-833-91	RES, CHIP	10K	5%	1/16W
R594	1-216-809-91	RES, CHIP	100	5%	1/16W
R595	1-216-833-91	RES, CHIP	10K	5%	1/16W
R604	1-218-830-91	RES, CHIP	200	0.5%	1/16W
R605	1-218-858-91	RES, CHIP	3K	0.5%	1/16W
R607	1-216-809-91	RES, CHIP	100	5%	1/16W
R612	1-216-841-91	RES, CHIP	47K	5%	1/16W
R615	1-216-809-91	RES, CHIP	100	5%	1/16W
R617	1-216-809-91	RES, CHIP	100	5%	1/16W
R622	1-216-809-91	RES, CHIP	100	5%	1/16W
R623	1-216-809-91	RES, CHIP	100	5%	1/16W
R629	1-216-809-91	RES, CHIP	100	5%	1/16W
R632	1-216-809-91	RES, CHIP	100	5%	1/16W
R633	1-216-809-91	RES, CHIP	100	5%	1/16W
R634	1-216-809-91	RES, CHIP	100	5%	1/16W
R640	1-216-809-91	RES, CHIP	100	5%	1/16W
R654	1-216-841-91	RES, CHIP	47K	5%	1/16W
R655	1-216-841-91	RES, CHIP	47K	5%	1/16W
R656	1-216-841-91	RES, CHIP	47K	5%	1/16W
R657	1-216-841-91	RES, CHIP	47K	5%	1/16W
R658	1-216-841-91	RES, CHIP	47K	5%	1/16W
R659	1-216-841-91	RES, CHIP	47K	5%	1/16W

Ref. No.	Part No.	Description			Remark
R660	1-216-837-91	RES, CHIP	22K	5%	1/16W
R661	1-216-837-91	RES, CHIP	22K	5%	1/16W
R662	1-216-837-91	RES, CHIP	22K	5%	1/16W
R663	1-216-841-91	RES, CHIP	47K	5%	1/16W
R664	1-216-841-91	RES, CHIP	47K	5%	1/16W
R665	1-216-841-91	RES, CHIP	47K	5%	1/16W
R666	1-216-821-91	RES, CHIP	1K	5%	1/16W
R667	1-216-841-91	RES, CHIP	47K	5%	1/16W
R692	1-216-833-91	RES, CHIP	10K	5%	1/16W
R693	1-216-833-91	RES, CHIP	10K	5%	1/16W
R694	1-216-833-91	RES, CHIP	10K	5%	1/16W
R695	1-216-833-91	RES, CHIP	10K	5%	1/16W
R696	1-216-833-91	RES, CHIP	10K	5%	1/16W
R697	1-216-833-91	RES, CHIP	10K	5%	1/16W
R701	1-216-801-91	RES, CHIP	22	5%	1/16W
R718	1-216-817-91	RES, CHIP	470	5%	1/16W
R719	1-216-817-91	RES, CHIP	470	5%	1/16W
R720	1-216-821-91	RES, CHIP	1K	5%	1/16W
R731	1-216-182-91	RES, CHIP	220	5%	1/8W
R732	1-216-180-91	RES, CHIP	180	5%	1/8W
R733	1-216-821-91	RES, CHIP	1K	5%	1/16W
R734	1-216-828-91	RES, CHIP	3.9K	5%	1/16W
R735	1-216-841-91	RES, CHIP	47K	5%	1/16W
R736	1-216-821-91	RES, CHIP	1K	5%	1/16W
R901	1-216-821-91	RES, CHIP	1K	5%	1/16W
R903	1-216-829-91	RES, CHIP	4.7K	5%	1/16W
R904	1-216-825-91	RES, CHIP	2.2K	5%	1/16W
R905	1-216-184-91	RES, CHIP	270	5%	1/8W
R906	1-216-184-91	RES, CHIP	270	5%	1/8W
R907	1-216-184-91	RES, CHIP	270	5%	1/8W
R908	1-216-184-91	RES, CHIP	270	5%	1/8W
R909	1-216-184-91	RES, CHIP	270	5%	1/8W
R910	1-216-184-91	RES, CHIP	270	5%	1/8W
R935	1-216-821-91	RES, CHIP	1K	5%	1/16W
R936	1-216-865-91	RES, CHIP	3K	5%	1/16W
R937	1-220-158-91	RES, CHIP	3.6K	5%	1/16W
R983	1-216-841-91	RES, CHIP	47K	5%	1/16W
R2003	1-216-809-91	RES, CHIP	100	5%	1/16W
R2004	1-216-809-91	RES, CHIP	100	5%	1/16W
R2005	1-216-809-91	RES, CHIP	100	5%	1/16W
R2006	1-216-809-91	RES, CHIP	100	5%	1/16W
R2007	1-216-833-91	RES, CHIP	10K	5%	1/16W
R2008	1-216-833-91	RES, CHIP	10K	5%	1/16W
R2009	1-216-809-91	RES, CHIP	100	5%	1/16W
R2010	1-216-864-91	SHORT	0		
R2016	1-216-864-91	SHORT	0		
		< COMPOSITION CIRCUIT BLOCK >			
RB401	1-239-412-91	NETWORK RESISTOR (CHIP) 100			
RB402	1-239-412-91	NETWORK RESISTOR (CHIP) 100			
RB403	1-239-412-91	NETWORK RESISTOR (CHIP) 100			
RB404	1-239-412-91	NETWORK RESISTOR (CHIP) 100			
RB405	1-239-412-91	NETWORK RESISTOR (CHIP) 100			
RB406	1-239-412-91	NETWORK RESISTOR (CHIP) 100			
RB407	1-239-412-91	NETWORK RESISTOR (CHIP) 100			
RB408	1-239-412-91	NETWORK RESISTOR (CHIP) 100			
RB409	1-239-412-91	NETWORK RESISTOR (CHIP) 100			
RB410	1-239-412-91	NETWORK RESISTOR (CHIP) 100			

Ref. No.	Part No.	Description	Remark
RB417	1-236-904-91	NETWORK RESISTOR (CHIP) 1K	
RB501	1-239-412-91	NETWORK RESISTOR (CHIP) 100	
RB502	1-239-412-91	NETWORK RESISTOR (CHIP) 100	
RB503	1-239-412-91	NETWORK RESISTOR (CHIP) 100	
RB504	1-239-412-91	NETWORK RESISTOR (CHIP) 100	
RB505	1-239-412-91	NETWORK RESISTOR (CHIP) 100	
RB506	1-239-412-91	NETWORK RESISTOR (CHIP) 100	
RB507	1-239-412-91	NETWORK RESISTOR (CHIP) 100	
RB508	1-239-412-91	NETWORK RESISTOR (CHIP) 100	
RB509	1-239-412-91	NETWORK RESISTOR (CHIP) 100	
RB510	1-239-412-91	NETWORK RESISTOR (CHIP) 100	
RB511	1-239-412-91	NETWORK RESISTOR (CHIP) 100	
RB512	1-239-412-91	NETWORK RESISTOR (CHIP) 100	
RB513	1-239-419-91	NETWORK RESISTOR (CHIP) 470	
RB514	1-239-419-91	NETWORK RESISTOR (CHIP) 470	
RB516	1-239-412-91	NETWORK RESISTOR (CHIP) 100	
RB520	1-236-904-91	NETWORK RESISTOR (CHIP) 1K	
RB521	1-239-412-91	NETWORK RESISTOR (CHIP) 100	
RB522	1-236-904-91	NETWORK RESISTOR (CHIP) 1K	
RB523	1-236-904-91	NETWORK RESISTOR (CHIP) 1K	
RB524	1-236-904-91	NETWORK RESISTOR (CHIP) 1K	
RB701	1-239-621-91	NETWORK RESISTOR (CHIP) 22	
RB702	1-239-621-91	NETWORK RESISTOR (CHIP) 22	
RB703	1-239-621-91	NETWORK RESISTOR (CHIP) 22	
RB704	1-239-621-91	NETWORK RESISTOR (CHIP) 22	
		< VARIABLE RESISTOR >	
RV401	1-238-853-21	RES, ADJ, CERMET 1K	
RV402	1-238-853-21	RES, ADJ, CERMET 1K	
RV404	1-238-855-21	RES, ADJ, CERMET 4.7K	
RV405	1-238-854-21	RES, ADJ, CERMET 2.2K	
		< VIBRATOR >	
X502	1-579-907-21	VIBRATOR, CERAMIC (20MHz)	
X503	1-781-230-21	VIBRATOR, CRYSTAL (7.159MHz)	

****

Ref. No.	Part No.	Description	Remark
	A-8056-234-A	FE-40 BOARD, COMPLETE	
		**********************	
		< CONNECTOR >	
CN1881	1-785-468-11	CONNECTOR, FFC/FPC 13P	
CN1882	1-778-273-21	CONNECTOR (RESEPTACLE) 15P	
		< DIODE >	
D1881	8-719-066-17	DIODE FTZ6.8E-T148	
D1882	8-719-066-17	DIODE FTZ6.8E-T148	
D1885	8-719-017-19	DIODE 02DZ10-TPH3	

****

Ref. No.	Part No.	Description	Remark
	1-661-554-11	FP-702 FLEXIBLE BOARD	
		*********************	
PH904	8-719-980-75	PHOTO INTRRUPTER GP2S24-C	
PH905	8-719-980-75	PHOTO INTRRUPTER GP2S24-C	
PH906	8-719-980-75	PHOTO INTRRUPTER GP2S24-C	

****

Ref. No.	Part No.	Description	Remark
	1-661-553-11	FP-703 FLEXIBLE BOARD	
		*********************	
PH901	8-719-980-75	PHOTO INTRRUPTER GP2S24-C	
PH902	8-749-923-97	PHOTO INTERRUPTER GP2S40K	
PH903	8-749-923-97	PHOTO INTERRUPTER GP2S40K	

****

Ref. No.	Part No.	Description	Remark
	A-8056-245-A	HP-40 BOARD, COMPLETE	
		**********************	
		< CONNECTOR >	
* CN1851	1-573-768-21	PIN, CONNECTOR (1.5MM) (SMD)5P	
		< PHOTO INTERRUPTER >	
PH1851	8-749-015-68	PHOTO INTERRUPTER RPI-221N	
PH1852	8-749-015-68	PHOTO INTERRUPTER RPI-221N	

****

Ref. No.	Part No.	Description	Remark
	A-8056-243-A	JD-40 BOARD, COMPLETE	
		**********************	
		< CONNECTOR >	
CN1861	1-691-550-21	PIN, CONNECTOR (1.5MM)(SMD) 3P	
		< PHOTO INTERRUPTER >	
PH1861	8-719-980-75	PHOTO INTRRUPTER GP2S24-C	

****

Ref. No.	Part No.	Description	Remark
	A-8056-235-A	JK-40 BOARD, COMPLETE	
		**********************	
		< CAPACITOR >	
C1651	1-164-156-91	CERAMIC CHIP 0.1uF	25V
C1652	1-164-156-91	CERAMIC CHIP 0.1uF	25V
C1653	1-162-919-91	CERAMIC CHIP 22PF 5%	50V
C1654	1-162-919-91	CERAMIC CHIP 22PF 5%	50V
C1655	1-162-919-91	CERAMIC CHIP 22PF 5%	50V
C1656	1-162-919-91	CERAMIC CHIP 22PF 5%	50V
C1657	1-162-919-91	CERAMIC CHIP 22PF 5%	50V
C1658	1-162-919-91	CERAMIC CHIP 22PF 5%	50V
C1659	1-162-919-91	CERAMIC CHIP 22PF 5%	50V
C1660	1-162-919-91	CERAMIC CHIP 22PF 5%	50V
C1661	1-162-919-91	CERAMIC CHIP 22PF 5%	50V
C1662	1-164-156-91	CERAMIC CHIP 0.1uF	25V
		< CONNECTOR >	
CN1651	1-770-705-11	CONNECTOR, FFC/FPC 22P	
		< DIODE >	
D1657	8-719-941-84	DIODE DA204UT106	
D1671	8-719-066-17	DIODE FTZ6.8E-T148	
D1672	8-719-066-17	DIODE FTZ6.8E-T148	
D1673	8-719-066-17	DIODE FTZ6.8E-T148	
D1674	8-719-066-17	DIODE FTZ6.8E-T148	
		< FERRITE BEAD >	
FB1651	1-500-238-22	FERRITE 0uH	
FB1652	1-500-238-22	FERRITE 0uH	

Ref. No.	Part No.	Description			Remark
FB1653	1-500-238-22	FERRITE	0uH		
FB1654	1-500-238-22	FERRITE	0uH		
FB1655	1-500-238-22	FERRITE	0uH		
FB1656	1-500-238-22	FERRITE	0uH		
FB1657	1-500-238-22	FERRITE	0uH		
FB1658	1-500-238-22	FERRITE	0uH		
FB1659	1-500-238-22	FERRITE	0uH		
FB1660	1-500-238-22	FERRITE	0uH		
FB1661	1-500-238-22	FERRITE	0uH		
FB1662	1-500-238-22	FERRITE	0uH		
FB1663	1-500-238-22	FERRITE	0uH		
FB1664	1-500-238-22	FERRITE	0uH		
FB1665	1-500-238-22	FERRITE	0uH		
FB1667	1-500-238-22	FERRITE	0uH		
FB1668	1-500-238-22	FERRITE	0uH		
		< JACK >			
J1651	1-785-454-21	CONNECTOR, AMTHENOL 36P (PARALLEL PORT)			
		< RESISTOR >			
R1651	1-216-821-91	RES, CHIP	1K	5%	1/16W
R1652	1-216-825-91	RES, CHIP	2.2K	5%	1/16W
R1653	1-216-821-91	RES, CHIP	1K	5%	1/16W
R1654	1-216-821-91	RES, CHIP	1K	5%	1/16W
R1655	1-216-825-91	RES, CHIP	2.2K	5%	1/16W
R1656	1-216-825-91	RES, CHIP	2.2K	5%	1/16W
R1657	1-216-825-91	RES, CHIP	2.2K	5%	1/16W
R1658	1-216-825-91	RES, CHIP	2.2K	5%	1/16W
R1659	1-216-821-91	RES, CHIP	1K	5%	1/16W
		< COMPOSITION CIRCUIT BLOCK >			
RB1651	1-236-904-91	NETWORK RESISTOR (CHIP) 1K			
RB1652	1-236-904-91	NETWORK RESISTOR (CHIP) 1K			

****

Ref. No.	Part No.	Description			Remark
	A-8056-242-A	MD-40 BOARD, COMPLETE			
		***********************			
		< CAPACITOR >			
C1900	1-165-319-91	CERAMIC CHIP 0.1uF			50V
C1901	1-165-319-91	CERAMIC CHIP 0.1uF			50V
C1902	1-164-695-91	CERAMIC CHIP 0.0022uF		5%	50V
C1903	1-164-695-91	CERAMIC CHIP 0.0022uF		5%	50V
C1904	1-164-315-91	CERAMIC CHIP 470PF		5%	50V
C1905	1-164-315-91	CERAMIC CHIP 470PF		5%	50V
C1906	1-164-156-91	CERAMIC CHIP 0.1uF			25V
C1907	1-164-156-91	CERAMIC CHIP 0.1uF			25V
C1910	1-164-156-91	CERAMIC CHIP 0.1uF			25V
C1911	1-164-156-91	CERAMIC CHIP 0.1uF			25V
		< CONNECTOR >			
* CN1931	1-569-775-21	PIN, CONNECTOR (SMD) 5P			
* CN1932	1-580-055-21	PIN, CONNECTOR (SMD) 2P			
CN1933	1-573-347-21	CONNECTOR, FFC/FPC 7P			
CN1934	1-573-917-21	CONNECTOR, FFC/FPC (ZIF) 8P			
* CN1935	1-580-056-21	PIN, CONNECTOR (SMD) 3P			
CN1936	1-573-370-21	CONNECTOR, FFC/FPC 30P			
CN1937	1-564-630-11	PIN, CONNECTOR 14P			
* CN1938	1-580-055-41	PIN, CONNECTOR (SMD) 2P			
* CN1940	1-580-056-41	PIN, CONNECTOR (SMD) 3P			
CN1941	1-580-055-61	PIN, CONNECTOR (SMD) 2P			
CN1942	1-564-016-11	PIN, CONNECTOR 6P			
* CN1943	1-580-057-21	PIN, CONNECTOR (SMD) 4P			
		< DIODE >			
D1901	8-719-941-21	DIODE DAP202UT106			
D1903	8-719-056-77	DIODE UDZ-TE-17-3.9B			
		< FUSE >			
⚠F1901	1-533-771-21	FUSE (SMD) (0.8A)			
⚠F1902	1-533-771-21	FUSE (SMD) (0.8A)			
⚠F1903	1-533-710-21	FUSE (SMD) (1.6A)			
⚠F1904	1-533-710-21	FUSE (SMD) (1.6A)			
		< IC >			
IC1900	8-759-821-82	IC LB1644			
IC1901	8-759-471-56	IC STA506A			
IC1902	8-759-329-01	IC LM339NS-E20			
IC1903	8-759-268-61	IC SN74HC08ANSR			
		< TRANSISTOR >			
Q1900	8-729-140-76	TRANSISTOR	2SD999-T1-CLCK		
Q1902	8-729-027-43	TRANSISTOR	DTC114EKA-T146		
Q1903	8-729-904-61	TRANSISTOR	DTB113ZK-T-146		
		< RESISTOR >			
R1900	1-216-033-91	RES, CHIP	220	5%	1/10W
R1901	1-216-033-91	RES, CHIP	220	5%	1/10W
R1902	1-216-033-91	RES, CHIP	220	5%	1/10W
R1903	1-216-033-91	RES, CHIP	220	5%	1/10W
R1904	1-216-033-91	RES, CHIP	220	5%	1/10W
R1905	1-216-033-91	RES, CHIP	220	5%	1/10W
R1906	1-216-033-91	RES, CHIP	220	5%	1/10W
R1907	1-216-033-91	RES, CHIP	220	5%	1/10W
R1908	1-216-033-91	RES, CHIP	220	5%	1/10W
R1910	1-216-841-91	RES, CHIP	47K	5%	1/16W
R1911	1-216-817-91	RES, CHIP	470	5%	1/16W
R1917	1-218-835-91	RES, CHIP	330	0.5%	1/16W
R1918	1-218-827-91	RES, CHIP	150	0.5%	1/16W
R1919	1-216-826-91	RES, CHIP	2.7K	5%	1/16W
R1920	1-218-847-91	RES, CHIP	1K	0.5%	1/16W
R1921	1-216-826-91	RES, CHIP	2.7K	5%	1/16W
⚠R1922	1-216-352-51	METAL OXIDE	1.8	5%	1W F
⚠R1923	1-216-352-51	METAL OXIDE	1.8	5%	1W F
R1924	1-216-841-91	RES, CHIP	47K	5%	1/16W
R1925	1-216-841-91	RES, CHIP	47K	5%	1/16W
R1926	1-218-847-91	RES, CHIP	1K	0.5%	1/16W
R1927	1-216-841-91	RES, CHIP	47K	5%	1/16W
R1937	1-216-827-91	RES, CHIP	3.3K	5%	1/16W
R1938	1-216-825-91	RES, CHIP	2.2K	5%	1/16W
R1939	1-216-826-91	RES, CHIP	2.7K	5%	1/16W
R1940	1-216-826-91	RES, CHIP	2.7K	5%	1/16W
R1944	1-216-864-91	SHORT	0		
R1945	1-216-841-91	RES, CHIP	47K	5%	1/16W

****

The components identified by mark ⚠ or dotted line with mark ⚠ are critical for safety.
Replace only with part number specified.

MP-40

Ref. No.	Part No.	Description			Remark
	A-8056-229-A	MP-40 BOARD, COMPLETE			
		************************			
	X-4622-257-1	SPRING ASSY, MP			
		< CAPACITOR >			
C1501	1-164-156-91	CERAMIC CHIP	0.1uF		25V
C1503	1-124-779-21	ELECT CHIP	10uF	20%	16V
C1504	1-164-156-91	CERAMIC CHIP	0.1uF		25V
C1505	1-124-779-21	ELECT CHIP	10uF	20%	16V
C1506	1-164-156-91	CERAMIC CHIP	0.1uF		25V
C1507	1-164-156-91	CERAMIC CHIP	0.1uF		25V
C1508	1-164-346-91	CERAMIC CHIP	1uF		16V
C1509	1-164-156-91	CERAMIC CHIP	0.1uF		25V
C1511	1-164-156-91	CERAMIC CHIP	0.1uF		25V
C1512	1-164-156-91	CERAMIC CHIP	0.1uF		25V
C1513	1-164-156-91	CERAMIC CHIP	0.1uF		25V
C1514	1-164-156-91	CERAMIC CHIP	0.1uF		25V
C1515	1-164-156-91	CERAMIC CHIP	0.1uF		25V
C1516	1-164-156-91	CERAMIC CHIP	0.1uF		25V
C1517	1-164-156-91	CERAMIC CHIP	0.1uF		25V
C1518	1-164-156-91	CERAMIC CHIP	0.1uF		25V
C1519	1-164-156-91	CERAMIC CHIP	0.1uF		25V
C1520	1-164-156-91	CERAMIC CHIP	0.1uF		25V
C1521	1-164-156-91	CERAMIC CHIP	0.1uF		25V
C1522	1-164-156-91	CERAMIC CHIP	0.1uF		25V
C1523	1-164-156-91	CERAMIC CHIP	0.1uF		25V
C1524	1-164-156-91	CERAMIC CHIP	0.1uF		25V
C1525	1-164-156-91	CERAMIC CHIP	0.1uF		25V
C1526	1-164-156-91	CERAMIC CHIP	0.1uF		25V
C1531	1-164-156-91	CERAMIC CHIP	0.1uF		25V
C1532	1-164-156-91	CERAMIC CHIP	0.1uF		25V
C1533	1-164-156-91	CERAMIC CHIP	0.1uF		25V
C1534	1-164-156-91	CERAMIC CHIP	0.1uF		25V
C1535	1-164-156-91	CERAMIC CHIP	0.1uF		25V
C1536	1-164-156-91	CERAMIC CHIP	0.1uF		25V
C1537	1-162-915-91	CERAMIC CHIP	10PF	0.5PF	50V
C1538	1-164-156-91	CERAMIC CHIP	0.1uF		25V
C1539	1-124-779-21	ELECT CHIP	10uF	20%	16V
C1590	1-164-156-91	CERAMIC CHIP	0.1uF		25V
C1591	1-124-779-21	ELECT CHIP	10uF	20%	16V
		< CONNECTOR >			
CN1501	1-793-111-11	CONNECTOR, MEMORY STICK (MEMORY STICK)			
CN1530	1-793-187-11	CONNECTOR, PC CARD (PC CARD)			
CN1531	1-774-767-11	CONNECTOR, FFC/FPC 15P			
CN1532	1-785-469-11	CONNECTOR, FFC/FPC 30P			
		< DIODE >			
D1501	8-719-941-87	DIODE DAN202UT106			
D1502	8-719-941-87	DIODE DAN202UT106			
		< FERRITE BEAD >			
FB1631	1-500-288-21	FERRITE	0uH		
FB1632	1-500-288-21	FERRITE	0uH		

Ref. No.	Part No.	Description			Remark
		< IC >			
IC1501	8-759-590-88	IC HG72C306AH05TE1			
IC1502	8-759-591-66	IC HD6433032ST06X			
IC1503	8-759-590-94	IC HG71G030A2R05TE			
IC1504	8-759-590-86	IC SRM2B256SLTMX5-T			
IC1505	8-759-591-44	IC R1121N331B-TR			
IC1531	8-759-578-68	IC SN74LVCC4245APWR			
IC1532	8-759-472-39	IC 74VHC244MTCX			
IC1533	8-759-472-39	IC 74VHC244MTCX			
IC1534	8-759-472-39	IC 74VHC244MTCX			
IC1535	8-759-472-41	IC 74VHCT244MTCX			
IC1536	8-759-181-29	IC TC7W04FU(TE12R)			
IC1550	8-759-049-97	IC SN74HC32APWR			
		<TRANSISTOR >			
Q1501	8-729-037-73	TRANSISTOR UN9212J-(TX).SO			
		< RESISTOR >			
R1501	1-216-802-91	RES, CHIP	27	5%	1/16W
R1502	1-216-845-91	RES, CHIP	100K	5%	1/16W
R1503	1-216-802-91	RES, CHIP	27	5%	1/16W
R1504	1-216-802-91	RES, CHIP	27	5%	1/16W
R1505	1-216-802-91	RES, CHIP	27	5%	1/16W
R1506	1-216-845-91	RES, CHIP	100K	5%	1/16W
R1507	1-216-845-91	RES, CHIP	100K	5%	1/16W
R1508	1-216-845-91	RES, CHIP	100K	5%	1/16W
R1509	1-216-845-91	RES, CHIP	100K	5%	1/16W
R1511	1-216-845-91	RES, CHIP	100K	5%	1/16W
R1512	1-216-845-91	RES, CHIP	100K	5%	1/16W
R1514	1-216-845-91	RES, CHIP	100K	5%	1/16W
R1515	1-216-845-91	RES, CHIP	100K	5%	1/16W
R1516	1-216-845-91	RES, CHIP	100K	5%	1/16W
R1517	1-216-803-91	RES, CHIP	33	5%	1/16W
R1518	1-216-803-91	RES, CHIP	33	5%	1/16W
R1519	1-216-803-91	RES, CHIP	33	5%	1/16W
R1520	1-216-845-91	RES, CHIP	100K	5%	1/16W
R1521	1-216-833-91	RES, CHIP	10K	5%	1/16W
R1522	1-216-845-91	RES, CHIP	100K	5%	1/16W
R1523	1-216-845-91	RES, CHIP	100K	5%	1/16W
R1524	1-216-845-91	RES, CHIP	100K	5%	1/16W
R1525	1-216-845-91	RES, CHIP	100K	5%	1/16W
R1526	1-216-845-91	RES, CHIP	100K	5%	1/16W
R1528	1-216-841-91	RES, CHIP	47K	5%	1/16W
R1529	1-216-864-91	SHORT	0		
R1530	1-216-864-91	SHORT	0		
R1531	1-216-864-91	SHORT	0		
R1532	1-216-864-91	SHORT	0		
R1533	1-216-864-91	SHORT	0		
R1534	1-216-864-91	SHORT	0		
R1535	1-216-864-91	SHORT	0		
R1536	1-216-864-91	SHORT	0		
R1537	1-216-864-91	SHORT	0		
R1538	1-216-845-91	RES, CHIP	100K	5%	1/16W
R1539	1-216-864-91	SHORT	0		
R1540	1-216-864-91	SHORT	0		
R1541	1-216-845-91	RES, CHIP	100K	5%	1/16W
R1542	1-216-845-91	RES, CHIP	100K	5%	1/16W

Ref. No.	Part No.	Description			Remark
R1543	1-216-864-91	SHORT	0		
R1544	1-216-864-91	SHORT	0		
R1545	1-216-864-91	SHORT	0		
R1546	1-216-845-91	RES, CHIP	100K	5%	1/16W
R1547	1-216-845-91	RES, CHIP	100K	5%	1/16W
R1548	1-216-845-91	RES, CHIP	100K	5%	1/16W
R1549	1-216-864-91	SHORT	0		
R1550	1-216-864-91	SHORT	0		
R1551	1-216-864-91	SHORT	0		
R1552	1-216-864-91	SHORT	0		
R1553	1-216-864-91	SHORT	0		
R1554	1-216-864-91	SHORT	0		
R1555	1-216-864-91	SHORT	0		
R1556	1-216-864-91	SHORT	0		
R1557	1-216-864-91	SHORT	0		
R1558	1-216-864-91	SHORT	0		
R1559	1-216-864-91	SHORT	0		
R1560	1-216-864-91	SHORT	0		
R1561	1-216-864-91	SHORT	0		
R1562	1-216-845-91	RES, CHIP	100K	5%	1/16W
R1563	1-216-845-91	RES, CHIP	100K	5%	1/16W
R1564	1-216-845-91	RES, CHIP	100K	5%	1/16W
R1565	1-216-845-91	RES, CHIP	100K	5%	1/16W
R1566	1-216-845-91	RES, CHIP	100K	5%	1/16W
R1568	1-216-864-91	SHORT	0		
R1569	1-216-864-91	SHORT	0		
R1570	1-216-864-91	SHORT	0		
R1571	1-216-845-91	RES, CHIP	100K	5%	1/16W
R1572	1-216-845-91	RES, CHIP	100K	5%	1/16W
R1573	1-216-845-91	RES, CHIP	100K	5%	1/16W
R1574	1-216-845-91	RES, CHIP	100K	5%	1/16W
R1575	1-216-845-91	RES, CHIP	100K	5%	1/16W
R1576	1-216-864-91	SHORT	0		
R1577	1-216-845-91	RES, CHIP	100K	5%	1/16W
R1578	1-216-845-91	RES, CHIP	100K	5%	1/16W
R1579	1-216-845-91	RES, CHIP	100K	5%	1/16W
R1580	1-216-845-91	RES, CHIP	100K	5%	1/16W
R1581	1-216-864-91	SHORT	0		
R1582	1-216-864-91	SHORT	0		
R1583	1-216-864-91	SHORT	0		
R1584	1-216-817-91	RES, CHIP	470	5%	1/16W
R1585	1-216-864-91	SHORT	0		
R1588	1-216-845-91	RES, CHIP	100K	5%	1/16W
R1589	1-216-845-91	RES, CHIP	100K	5%	1/16W
R1590	1-216-845-91	RES, CHIP	100K	5%	1/16W
R1591	1-216-864-91	SHORT	0		
R1592	1-216-833-91	RES, CHIP	10K	5%	1/16W
R1593	1-216-841-91	RES, CHIP	47K	5%	1/16W
R1594	1-216-841-91	RES, CHIP	47K	5%	1/16W
R1595	1-216-841-91	RES, CHIP	47K	5%	1/16W
R1596	1-216-841-91	RES, CHIP	47K	5%	1/16W
R1597	1-216-841-91	RES, CHIP	47K	5%	1/16W
R1598	1-216-841-91	RES, CHIP	47K	5%	1/16W
R1599	1-216-841-91	RES, CHIP	47K	5%	1/16W
R1600	1-216-841-91	RES, CHIP	47K	5%	1/16W
R1601	1-216-833-91	RES, CHIP	10K	5%	1/16W
R1602	1-216-841-91	RES, CHIP	47K	5%	1/16W

Ref. No.	Part No.	Description			Remark
R1603	1-216-841-91	RES, CHIP	47K	5%	1/16W
R1604	1-216-841-91	RES, CHIP	47K	5%	1/16W
R1605	1-216-841-91	RES, CHIP	47K	5%	1/16W
R1606	1-216-841-91	RES, CHIP	47K	5%	1/16W
R1607	1-216-841-91	RES, CHIP	47K	5%	1/16W
R1608	1-216-841-91	RES, CHIP	47K	5%	1/16W
R1609	1-216-841-91	RES, CHIP	47K	5%	1/16W
R1610	1-216-845-91	RES, CHIP	100K	5%	1/16W
R1613	1-216-841-91	RES, CHIP	47K	5%	1/16W
R1630	1-216-841-91	RES, CHIP	47K	5%	1/16W
R1631	1-216-841-91	RES, CHIP	47K	5%	1/16W
R1632	1-216-841-91	RES, CHIP	47K	5%	1/16W
R1633	1-216-841-91	RES, CHIP	47K	5%	1/16W
R1635	1-216-841-91	RES, CHIP	47K	5%	1/16W
R1636	1-216-841-91	RES, CHIP	47K	5%	1/16W
R1637	1-216-841-91	RES, CHIP	47K	5%	1/16W

< COMPOSITION CIRCUIT BLOCK >

Ref. No.	Part No.	Description
RB1502	1-239-621-91	NETWORK RESISTOR (CHIP) 22
RB1503	1-236-907-91	NETWORK RESISTOR (CHIP) 100K

< VIBRATOR >

Ref. No.	Part No.	Description
X1501	1-767-980-21	VIBRATOR, CERAMIC (20MHz)

****

A-8056-244-A RD-40 BOARD, COMPLETE
****

< CONNECTOR >

Ref. No.	Part No.	Description
* CN1871	1-580-055-21	PIN, CONNECTOR (SMD) 2P

< SWITCH >

Ref. No.	Part No.	Description
S1871	1-572-467-11	SWITCH, PUSH (1 KEY) (RIBBON DOOR DETECT)

****

A-8056-226-A SW-40 BOARD, COMPLETE
****

< BATTERY >

Ref. No.	Part No.	Description
BT1700	1-528-724-11	BATTERY, V/L RICHARGEABL

< CAPACITOR >

Ref. No.	Part No.	Description		Remark
C1700	1-163-038-91	CERAMIC CHIP	0.1uF	25V
C1701	1-163-038-91	CERAMIC CHIP	0.1uF	25V

< CONNECTOR >

Ref. No.	Part No.	Description
CN1701	1-785-684-11	CONNECTOR, FFC/FPC 22P

< DIODE >

Ref. No.	Part No.	Description
D1731	8-719-023-59	LED PG1102W-TR (POWER)
D1733	8-719-018-24	LED AA1102W-TR (INPUT)
D1734	8-719-018-24	LED AA1102W-TR (MEMORY)
D1735	8-719-018-24	LED AA1102W-TR (RIBBON ERORR INDICATOR)
D1736	8-719-018-24	LED AA1102W-TR (PAPER REPLACEMENT INDICATOR)

Ref. No.	Part No.	Description			Remark
D1737	8-719-064-59	LED PG1101F-TR (PRINTING STATUS INDICATOR)			
D1738	8-719-064-59	LED PG1101F-TR (PRINTING STATUS INDICATOR)			
D1739	8-719-064-59	LED PG1101F-TR (PRINTING STATUS INDICATOR)			
D1750	8-719-421-28	DIODE MA728-TX			
		< FERRITE BEAD >			
FB1700	1-500-241-22	FERRITE	0uH		
FB1701	1-500-241-22	FERRITE	0uH		
FB1702	1-500-241-22	FERRITE	0uH		
FB1703	1-500-241-22	FERRITE	0uH		
FB1704	1-500-242-22	FERRITE	0uH		
FB1705	1-500-242-22	FERRITE	0uH		
FB1706	1-500-242-22	FERRITE	0uH		
		< IC >			
IC1700	8-759-570-30	IC RTC-4543SBB-L2			
		< SHORT >			
JR1701	1-216-296-91	SHORT	0		
JR1702	1-216-296-91	SHORT	0		
JR1703	1-216-296-91	SHORT	0		
JR1704	1-216-296-91	SHORT	0		
JR1705	1-216-296-91	SHORT	0		
JR1706	1-216-296-91	SHORT	0		
JR1708	1-216-296-91	SHORT	0		
JR1709	1-216-296-91	SHORT	0		
JR1710	1-216-296-91	SHORT	0		
JR1711	1-216-296-91	SHORT	0		
JR1714	1-216-296-91	SHORT	0		
		< COIL >			
L1700	1-412-058-21	INDUCTOR CHIP	10uH		
		< HARNESS >			
LN1701	1-958-356-31	HARNESS			
		< TRANSISTOR >			
Q1731	8-729-923-81	TRANSISTIR	DTC143EK-T146		
		< RESISTOR >			
R1701	1-216-210-91	RES, CHIP	3.3K	5%	1/8W
R1702	1-216-202-91	RES, CHIP	1.5K	5%	1/8W
R1703	1-216-242-91	RES, CHIP	68K	5%	1/8W
R1704	1-216-228-91	RES, CHIP	18K	5%	1/8W
R1705	1-216-234-91	RES, CHIP	33K	5%	1/8W
R1706	1-216-222-91	RES, CHIP	10K	5%	1/8W
R1707	1-216-216-91	RES, CHIP	5.6K	5%	1/8W
R1713	1-216-208-91	RES, CHIP	2.7K	5%	1/8W
R1714	1-216-204-91	RES, CHIP	1.8K	5%	1/8W
R1715	1-216-202-91	RES, CHIP	1.5K	5%	1/8W
R1716	1-216-202-91	RES, CHIP	1.5K	5%	1/8W
R1717	1-216-204-91	RES, CHIP	1.8K	5%	1/8W
R1718	1-216-208-91	RES, CHIP	2.7K	5%	1/8W
R1719	1-216-212-91	RES, CHIP	3.9K	5%	1/8W
R1720	1-216-218-91	RES, CHIP	6.8K	5%	1/8W
R1721	1-216-224-91	RES, CHIP	12K	5%	1/8W
R1722	1-216-236-91	RES, CHIP	39K	5%	1/8W
R1723	1-216-242-91	RES, CHIP	68K	5%	1/8W
R1724	1-216-296-91	SHORT	0		
R1731	1-216-182-91	RES, CHIP	220	5%	1/8W
R1733	1-216-182-91	RES, CHIP	220	5%	1/8W
R1734	1-216-182-91	RES, CHIP	220	5%	1/8W
R1735	1-216-182-91	RES, CHIP	220	5%	1/8W
R1736	1-216-182-91	RES, CHIP	220	5%	1/8W
R1737	1-216-182-91	RES, CHIP	220	5%	1/8W
R1738	1-216-182-91	RES, CHIP	220	5%	1/8W
R1739	1-216-182-91	RES, CHIP	220	5%	1/8W
R1750	1-216-190-91	RES, CHIP	470	5%	1/8W
R1751	1-216-180-91	RES, CHIP	180	5%	1/8W
R1754	1-216-214-91	RES, CHIP	4.7K	5%	1/8W
R1755	1-216-214-91	RES, CHIP	4.7K	5%	1/8W
		< SWITCH >			
S1701	1-762-733-21	SWITCH, ROTARY (FUNCTION SELECT)			
S1702	1-572-922-31	SWITCH, SLIDE (PRESET PRINT)			
S1706	1-572-921-21	SWITCH, KEY BOARD (PRINT)			
S1707	1-572-921-21	SWITCH, KEY BOARD (CAPTURE)			
S1708	1-572-921-21	SWITCH, KEY BOARD (PICTURE)			
S1710	1-572-921-21	SWITCH, KEY BOARD (⇨)			
S1711	1-572-921-21	SWITCH, KEY BOARD (⇦)			
S1712	1-572-921-21	SWITCH, KEY BOARD (⇩)			
S1713	1-572-921-21	SWITCH, KEY BOARD (⇧)			
S1714	1-572-921-21	SWITCH, KEY BOARD (VIDEO ► CARD, SAVE)			
S1715	1-572-921-21	SWITCH, KEY BOARD (MENU)			
S1717	1-572-921-21	SWITCH, KEY BOARD (ENTER)			
S1718	1-572-921-21	SWITCH, KEY BOARD (C, CLEAR ALL)			
S1719	1-692-605-31	SWITCH, SLIDE (INPUT SELECT)			
S1720	1-572-922-31	SWITCH, SLIDE (DATE)			

****

A-8056-240-A VI-40 BOARD, COMPLETE
****

Ref. No.	Part No.	Description			Remark
		< CAPACITOR >			
C100	1-164-156-91	CERAMIC CHIP	0.1uF		25V
C102	1-124-778-21	ELECT CHIP	22uF	20%	6.3V
C103	1-164-156-91	CERAMIC CHIP	0.1uF		25V
C104	1-164-156-91	CERAMIC CHIP	0.1uF		25V
C105	1-164-156-91	CERAMIC CHIP	0.1uF		25V
C106	1-164-156-91	CERAMIC CHIP	0.1uF		25V
C107	1-124-778-21	ELECT CHIP	22uF	20%	6.3V
C108	1-124-778-21	ELECT CHIP	22uF	20%	6.3V
C109	1-126-193-21	ELECT CHIP	1uF	20%	50V
C110	1-109-982-91	CERAMIC CHIP	1uF	10%	10V
C111	1-164-156-91	CERAMIC CHIP	0.1uF		25V
C112	1-124-778-21	ELECT CHIP	22uF	20%	6.3V
C113	1-109-982-91	CERAMIC CHIP	1uF	10%	10V
C114	1-109-982-91	CERAMIC CHIP	1uF	10%	10V
C116	1-124-778-21	ELECT CHIP	22uF	20%	6.3V
C117	1-164-156-91	CERAMIC CHIP	0.1uF		25V
C118	1-164-156-91	CERAMIC CHIP	0.1uF		25V

Ref. No.	Part No.	Description			Remark
C119	1-124-778-21	ELECT CHIP	22uF	20%	6.3V
C120	1-124-778-21	ELECT CHIP	22uF	20%	6.3V
C121	1-124-778-21	ELECT CHIP	22uF	20%	6.3V
C122	1-124-778-21	ELECT CHIP	22uF	20%	6.3V
C123	1-124-778-21	ELECT CHIP	22uF	20%	6.3V
C124	1-164-156-91	CERAMIC CHIP	0.1uF		25V
C125	1-124-778-21	ELECT CHIP	22uF	20%	6.3V
C126	1-164-156-91	CERAMIC CHIP	0.1uF		25V
C127	1-164-156-91	CERAMIC CHIP	0.1uF		25V
C128	1-124-778-21	ELECT CHIP	22uF	20%	6.3V
C130	1-164-156-91	CERAMIC CHIP	0.1uF		25V
C131	1-162-915-91	CERAMIC CHIP	10PF	0.5PF	50V
C133	1-124-778-21	ELECT CHIP	22uF	20%	6.3V
C139	1-164-156-91	CERAMIC CHIP	0.1uF		25V
C141	1-164-156-91	CERAMIC CHIP	0.1uF		25V
C144	1-164-156-91	CERAMIC CHIP	0.1uF		25V
C145	1-124-778-21	ELECT CHIP	22uF	20%	6.3V
C146	1-164-156-91	CERAMIC CHIP	0.1uF		25V
C147	1-164-156-91	CERAMIC CHIP	0.1uF		25V
C148	1-124-778-21	ELECT CHIP	22uF	20%	6.3V
C149	1-107-826-91	CERAMIC CHIP	0.1uF	10%	16V
C150	1-164-156-91	CERAMIC CHIP	0.1uF		25V
C151	1-107-826-91	CERAMIC CHIP	0.1uF	10%	16V
C152	1-164-156-91	CERAMIC CHIP	0.1uF		25V
C153	1-164-156-91	CERAMIC CHIP	0.1uF		25V
C154	1-164-156-91	CERAMIC CHIP	0.1uF		25V
C156	1-164-326-91	CERAMIC CHIP	0.47uF		16V
C157	1-109-982-91	CERAMIC CHIP	1uF	10%	10V
C158	1-115-416-91	CERAMIC CHIP	1000PF	5%	25V
C159	1-124-778-21	ELECT CHIP	22uF	20%	6.3V
C160	1-164-156-91	CERAMIC CHIP	0.1uF		25V
C161	1-164-156-91	CERAMIC CHIP	0.1uF		25V
C162	1-164-156-91	CERAMIC CHIP	0.1uF		25V
C163	1-109-982-91	CERAMIC CHIP	1uF	10%	10V
C164	1-164-156-91	CERAMIC CHIP	0.1uF		25V
C167	1-164-156-91	CERAMIC CHIP	0.1uF		25V
C168	1-165-176-91	CERAMIC CHIP	0.047uF	10%	16V
C169	1-126-205-21	ELECT CHIP	47uF	20%	6.3V
C170	1-109-982-91	CERAMIC CHIP	1uF	10%	10V
C171	1-165-176-91	CERAMIC CHIP	0.047uF	10%	16V
C172	1-164-156-91	CERAMIC CHIP	0.1uF		25V
C173	1-162-915-91	CERAMIC CHIP	10PF	0.5PF	50V
C174	1-109-982-91	CERAMIC CHIP	1uF	10%	10V
C175	1-162-970-91	CERAMIC CHIP	0.01uF	10%	25V
C176	1-162-916-91	CERAMIC CHIP	12PF	5%	50V
C177	1-115-416-91	CERAMIC CHIP	1000PF	5%	25V
C178	1-162-915-91	CERAMIC CHIP	10PF	0.5PF	50V
C183	1-162-913-91	CERAMIC CHIP	8PF	0.5PF	50V
C184	1-162-921-91	CERAMIC CHIP	33PF	5%	50V
C185	1-162-910-91	CERAMIC CHIP	5PF	0.25PF	50V
C186	1-124-778-21	ELECT CHIP	22uF	20%	6.3V
C187	1-162-970-91	CERAMIC CHIP	0.01uF	10%	25V
C188	1-164-156-91	CERAMIC CHIP	0.1uF		25V
C189	1-124-778-21	ELECT CHIP	22uF	20%	6.3V
C190	1-164-156-91	CERAMIC CHIP	0.1uF		25V
C193	1-164-156-91	CERAMIC CHIP	0.1uF		25V
C194	1-124-778-21	ELECT CHIP	22uF	20%	6.3V
C195	1-124-779-21	ELECT CHIP	10uF	20%	16V

Ref. No.	Part No.	Description			Remark
C196	1-124-778-21	ELECT CHIP	22uF	20%	6.3V
C197	1-104-913-91	TANTALUM CHIP	10uF	20%	16V
C198	1-124-778-21	ELECT CHIP	22uF	20%	6.3V
C201	1-162-919-91	CERAMIC CHIP	22PF	5%	50V
C202	1-162-919-91	CERAMIC CHIP	22PF	5%	50V
C250	1-164-156-91	CERAMIC CHIP	0.1uF		25V
C251	1-126-193-21	ELECT CHIP	1uF	20%	50V
C252	1-164-156-91	CERAMIC CHIP	0.1uF		25V
C253	1-115-416-91	CERAMIC CHIP	1000PF	5%	25V
C254	1-164-156-91	CERAMIC CHIP	0.1uF		25V
C255	1-164-156-91	CERAMIC CHIP	0.1uF		25V
C256	1-164-156-91	CERAMIC CHIP	0.1uF		25V
C257	1-164-156-91	CERAMIC CHIP	0.1uF		25V
C258	1-164-156-91	CERAMIC CHIP	0.1uF		25V
C259	1-164-156-91	CERAMIC CHIP	0.1uF		25V
C260	1-164-156-91	CERAMIC CHIP	0.1uF		25V
C261	1-124-778-21	ELECT CHIP	22uF	20%	6.3V
C262	1-164-156-91	CERAMIC CHIP	0.1uF		25V
		< CONNECTOR >			
CN101	1-785-467-11	CONNECTOR, FFC/FPC 8P			
CN102	1-784-685-11	CONNECTOR, FFC/FPC 20P			
		< TRIMMER >			
CT102	1-141-367-51	CAP, CHIP TRIMMER 20PF			
CT103	1-141-368-51	CAP, CHIP TRIMMER 30PF			
CT250	1-141-367-51	CAP, CHIP TRIMMER 20PF			
		< DIODE >			
D100	8-719-404-50	DIODE MA111-TX			
		< FERRITE BEAD >			
FB101	1-500-288-21	FERRITE	0uH		
		< FILTER >			
FL101	1-233-746-21	FILTER, BAND PASS			
FL102	1-233-676-21	FILTER, LOW PASS			
FL105	1-233-745-21	FILTER, LOW PASS			
FL106	1-233-744-21	FILTER, LOW PASS			
FL107	1-233-744-21	FILTER, LOW PASS			
FL250	1-233-455-21	FILTER, BAND PASS			
FL251	1-459-949-21	COIL			
		< IC >			
IC101	8-759-446-66	IC MM1113XFBE			
IC102	8-759-446-66	IC MM1113XFBE			
IC103	8-752-089-35	IC CXA1229AM-T6			
IC105	8-752-372-78	IC CXD2024AQ			
IC108	8-759-253-78	IC M51271FP-70AD			
IC110	8-759-182-84	IC PQ05SZ5U			
IC250	8-752-353-95	IC CXL5506M-T4			
		< COIL >			
L100	1-412-006-21	INDUCTOR CHIP	10uH		
L101	1-412-006-21	INDUCTOR CHIP	10uH		
L102	1-412-006-21	INDUCTOR CHIP	10uH		

Ref. No.	Part No.	Description			Remark
L103	1-412-006-21	INDUCTOR CHIP	10uH		
L104	1-412-006-21	INDUCTOR CHIP	10uH		
L106	1-412-006-21	INDUCTOR CHIP	10uH		
		< TRANSISTOR >			
Q101	8-729-901-80	TRANSISTOR	2SC2412K-T-146-Q		
Q102	8-729-402-82	TRANSISTOR	XN4501-TW		
Q104	8-729-402-82	TRANSISTOR	XN4501-TW		
Q107	8-729-402-82	TRANSISTOR	XN4501-TW		
Q109	8-729-402-82	TRANSISTOR	XN4501-TW		
Q113	8-729-901-80	TRANSISTOR	2SC2412K-T-146-Q		
Q123	8-729-402-85	TRANSISTOR	XN4601-TW		
Q124	8-729-402-85	TRANSISTOR	XN4601-TW		
Q250	8-729-421-69	TRANSISTOR	2SB709A-R-TX		
Q251	8-729-421-69	TRANSISTOR	2SB709A-R-TX		
Q252	8-729-901-80	TRANSISTOR	2SC2412K-T-146-Q		
		< RESISTOR >			
R100	1-216-832-91	RES, CHIP	8.2K	5%	1/16W
R101	1-216-817-91	RES, CHIP	470	5%	1/16W
R102	1-216-821-91	RES, CHIP	1K	5%	1/16W
R103	1-216-821-91	RES, CHIP	1K	5%	1/16W
R104	1-216-817-91	RES, CHIP	470	5%	1/16W
R105	1-216-817-91	RES, CHIP	470	5%	1/16W
R106	1-216-817-91	RES, CHIP	470	5%	1/16W
R109	1-216-833-91	RES, CHIP	10K	5%	1/16W
R111	1-216-839-91	RES, CHIP	33K	5%	1/16W
R112	1-216-837-91	RES, CHIP	22K	5%	1/16W
R113	1-216-823-91	RES, CHIP	1.5K	5%	1/16W
R114	1-216-816-91	RES, CHIP	390	5%	1/16W
R115	1-216-818-91	RES, CHIP	560	5%	1/16W
R116	1-211-990-91	RES, CHIP	75	0.5%	1/16W
R117	1-216-864-91	SHORT	0		
R118	1-216-821-91	RES, CHIP	1K	5%	1/16W
R119	1-216-813-91	RES, CHIP	220	5%	1/16W
R120	1-216-821-91	RES, CHIP	1K	5%	1/16W
R122	1-216-815-91	RES, CHIP	330	5%	1/16W
R123	1-216-833-91	RES, CHIP	10K	5%	1/16W
R124	1-218-881-91	RES, CHIP	27K	0.5%	1/16W
R125	1-216-825-91	RES, CHIP	2.2K	5%	1/16W
R127	1-216-843-91	RES, CHIP	68K	5%	1/16W
R128	1-216-817-91	RES, CHIP	470	5%	1/16W
R133	1-216-864-91	SHORT	0		
R135	1-216-821-91	RES, CHIP	1K	5%	1/16W
R136	1-216-821-91	RES, CHIP	1K	5%	1/16W
R137	1-216-864-91	SHORT	0		
R138	1-218-849-91	RES, CHIP	1.2K	0.5%	1/16W
R139	1-216-819-91	RES, CHIP	680	5%	1/16W
R140	1-216-802-91	RES, CHIP	27	5%	1/16W
R141	1-216-819-91	RES, CHIP	680	5%	1/16W
R145	1-216-839-91	RES, CHIP	33K	5%	1/16W
R146	1-216-832-91	RES, CHIP	8.2K	5%	1/16W
R147	1-218-851-91	RES, CHIP	1.5K	0.5%	1/16W
R148	1-216-819-91	RES, CHIP	680	5%	1/16W
R150	1-216-818-91	RES, CHIP	560	5%	1/16W
R157	1-218-859-91	RES, CHIP	3.3K	0.5%	1/16W
R160	1-216-809-91	RES, CHIP	100	5%	1/16W

Ref. No.	Part No.	Description			Remark
R161	1-216-833-91	RES, CHIP	10K	5%	1/16W
R162	1-216-839-91	RES, CHIP	33K	5%	1/16W
R163	1-216-836-91	RES, CHIP	18K	5%	1/16W
R164	1-202-930-91	RES, CHIP	750K	5%	1/16W
R165	1-218-830-91	RES, CHIP	200	0.5%	1/16W
R166	1-218-859-91	RES, CHIP	3.3K	0.5%	1/16W
R167	1-218-830-91	RES, CHIP	200	0.5%	1/16W
R168	1-216-844-91	RES, CHIP	82K	5%	1/16W
R169	1-216-836-91	RES, CHIP	18K	5%	1/16W
R170	1-216-817-91	RES, CHIP	470	5%	1/16W
R171	1-216-821-91	RES, CHIP	1K	5%	1/16W
R172	1-216-821-91	RES, CHIP	1K	5%	1/16W
R173	1-216-840-91	RES, CHIP	39K	5%	1/16W
R174	1-216-864-91	SHORT	0		
R175	1-216-821-91	RES, CHIP	1K	5%	1/16W
R177	1-216-821-91	RES, CHIP	1K	5%	1/16W
R178	1-216-850-91	RES, CHIP	270K	5%	1/16W
R179	1-216-823-91	RES, CHIP	1.5K	5%	1/16W
R187	1-216-864-91	SHORT	0		
R188	1-211-986-91	RES, CHIP	51	0.5%	1/16W
R190	1-216-817-91	RES, CHIP	470	5%	1/16W
R191	1-216-837-91	RES, CHIP	22K	5%	1/16W
R192	1-216-837-91	RES, CHIP	22K	5%	1/16W
R193	1-216-821-91	RES, CHIP	1K	5%	1/16W
R196	1-216-836-91	RES, CHIP	18K	5%	1/16W
R197	1-216-836-91	RES, CHIP	18K	5%	1/16W
R202	1-216-821-91	RES, CHIP	1K	5%	1/16W
R203	1-216-821-91	RES, CHIP	1K	5%	1/16W
R204	1-216-821-91	RES, CHIP	1K	5%	1/16W
R207	1-216-841-91	RES, CHIP	47K	5%	1/16W
R214	1-216-821-91	RES, CHIP	1K	5%	1/16W
R215	1-216-821-91	RES, CHIP	1K	5%	1/16W
R221	1-216-821-91	RES, CHIP	1K	5%	1/16W
R222	1-216-821-91	RES, CHIP	1K	5%	1/16W
R250	1-216-825-91	RES, CHIP	2.2K	5%	1/16W
R251	1-216-854-91	RES, CHIP	560K	5%	1/16W
R252	1-216-851-91	RES, CHIP	330K	5%	1/16W
R253	1-216-821-91	RES, CHIP	1K	5%	1/16W
R254	1-216-811-91	RES, CHIP	150	5%	1/16W
R255	1-216-821-91	RES, CHIP	1K	5%	1/16W
R256	1-216-841-91	RES, CHIP	47K	5%	1/16W
R257	1-216-841-91	RES, CHIP	47K	5%	1/16W
R258	1-216-821-91	RES, CHIP	1K	5%	1/16W
R259	1-216-841-91	RES, CHIP	47K	5%	1/16W
R260	1-216-821-91	RES, CHIP	1K	5%	1/16W
R280	1-216-835-91	RES, CHIP	15K	5%	1/16W
R289	1-216-846-91	RES, CHIP	120K	5%	1/16W
R290	1-216-864-91	SHORT	0		
R291	1-216-864-91	SHORT	0		
R292	1-216-864-91	SHORT	0		
R293	1-216-864-91	SHORT	0		
		< VARIABLE RESISTOR >			
RV102	1-238-853-21	RES, ADJ, CERMET 1K			
RV103	1-238-853-21	RES, ADJ, CERMET 1K			
RV105	1-238-855-21	RES, ADJ, CERMET 4.7K			
RV106	1-238-855-21	RES, ADJ, CERMET 4.7K			
RV250	1-238-852-21	RES, ADJ, CERMET 470			

Ref. No.	Part No.	Description			Remark
		< VIBRATOR >			
X101	1-781-295-21	VIBRATOR, CRYSTAL (17.73MHz)			
X102	1-781-231-21	VIBRATOR, CRYSTAL (4.43MHz)			

****

Ref. No.	Part No.	Description			Remark
	A-8056-233-A	VS-40 BOARD, COMPLETE			
		**********************			
		< CAPACITOR >			
C1801	1-126-611-11	ELECT	1000uF	20%	6.3V
		< TERMINAL/CONNECTOR >			
CJ1801	1-694-129-11	TERMINAL, S (S VIDEO INPUT)			
CN1801	1-778-320-21	CONNECTOR, FPC 8P			
		< DIODE >			
D1801	8-719-017-13	DIODE 02DZ7.5-TPH3			
D1802	8-719-067-40	DIODE STZ6.8N-T146			
D1803	8-719-067-40	DIODE STZ6.8N-T146			
D1804	8-719-067-40	DIODE STZ6.8N-T146			
D1805	8-719-067-40	DIODE STZ6.8N-T146			
D1811	8-719-941-84	DIODE DA204UT106			
D1812	8-719-941-84	DIODE DA204UT106			
		< FERRITE BEAD >			
FB1803	1-500-288-21	FERRITE	0uH		
		< JACK >			
J1801	1-563-866-51	JACK, PIN 1P (VIDEO INPUT)			
J1802	1-563-866-51	JACK, PIN 1P (OUTPUT)			
		< RESISTOR >			
R1805	1-211-990-91	RES, CHIP	75	0.5%	1/16W
R1806	1-211-990-91	RES, CHIP	75	0.5%	1/16W
R1807	1-211-990-91	RES, CHIP	75	0.5%	1/16W
R1812	1-216-821-91	RES, CHIP	1K	5%	1/16W
R1813	1-216-864-91	SHORT	0		
R1814	1-216-864-91	SHORT	0		
R1815	1-216-864-91	SHORT	0		
R1816	1-216-864-91	SHORT	0		
R1817	1-216-864-91	SHORT	0		
R1818	1-216-864-91	SHORT	0		
R1819	1-216-864-91	SHORT	0		
R1820	1-216-864-91	SHORT	0		

****

Ref. No.	Part No.	Description	Remark
		MISCELLANEOUS	
		**************	
9	1-790-361-11	FFC (DKSW39)	
17	1-790-969-11	CABLE, FLAT (DKMP15)	
19	1-790-968-11	CABLE, FLAT (DKMP30)	
26	1-956-625-21	HARNESS (HH-C00-010-BB)	
30	1-500-602-11	BEAD, FERRITE	
53	1-790-862-11	CABLE, FLAT (DKVI40)	
60	1-790-861-11	CABLE, FLAT (DKJK40)	
118	1-661-552-11	FP-700 FLEXIBLE BOARD	
119	1-500-602-11	BEAD, FERRITE	
153	1-661-553-11	FP-703 FLEXIBLE BOARD	
210	1-661-554-11	FP-702 FLEXIBLE BOARD	
220	1-783-926-21	CABLE, FLAT (POHE13)	
221	1-783-924-11	CABLE, FLAT (ADHE13)	
222	1-500-204-11	CORE, FERRITE	
258	1-790-362-31	FFC (VIVS39)	
⚠260	1-468-364-31	REGULATOR, SWITCHING	
261	1-956-199-21	HARNESS (PS-33)	
⚠263	1-473-791-71	SW BLOCK, POWER	
264	1-783-925-12	CABLE, FLAT (ADFE13)	
265	1-500-602-11	BEAD, FERRITE	
274	1-500-277-41	BEAD, FERRITE	
HEAD901	1-500-568-11	HEAD, THERMAL	
M901	1-763-018-21	FAN, DC (HEAD FAN)	
* M902	A-7092-967-A	MOTOR BLOCK ASSY, HEAD (HEAD UP/DOWN)	
* M903	A-7092-966-A	MOTOR BLOCK ASSY, REEL (RIBBON)	
M904	1-698-790-11	MOTOR, DC (STEPPING MOTOR) (PLATEN)	
M905	1-763-018-21	FAN, DC (POWER FAN)	

****

****

HARDWARE LIST

****

Ref. No.	Part No.	Description	Remark
#1	7-621-772-30	+B 2X6	
#2	7-685-651-71	SCREW +BVTP 3X20 TYPE2 IT-3	
#3	7-685-862-01	SCREW +BVTT 2.6X6 (S)	
#4	7-628-253-05	SCREW +PS 2X4	
#5	7-624-105-04	STOP RING 2.3, TYPE-E	
#6	7-685-852-01	SCREW +BVTT 2X5 (S)	
#7	7-685-103-11	SCREW +P 2X5 TYPE2 NON-SLIT	
#8	7-682-645-01	SCREW +PS 3X4	
#9	7-624-108-04	STOP RING 4.0, TYPE-E	
#10	7-628-253-95	SCREW +PS 2.6X4	
#11	7-621-759-65	+PSW, 2.6X8	
#12	7-685-792-01	SCREW +PTT 2.6X6 (S)	
#13	7-685-536-19	SCREW +BTP 2.6X12 TYPE2 N-S	

****

ACCESSORIES & PACKING MATERIALS

****

Ref. No.	Part No.	Description	Remark
	1-696-863-11	CORD, CONNECTION	
⚠	1-696-863-31	CORD, POWER (AEP)	
⚠	1-751-673-21	CORD, AC POWER (UK)	
	3-866-753-11	MANUAL, INSTRUCTION (ENGLISH, FRENCH)	
	3-866-753-21	MANUAL, INSTRUCTION (GERMAN, DUTCH) (AEP)	
	3-866-753-31	MANUAL, INSTRUCTION (SPANISH, ITALIAN) (AEP)	
	3-866-754-11	MANUAL, USE INSTRUCTION (ENGLISH, FRENCH)	
	3-866-754-21	MANUAL, USE INSTRUCTION (GERMAN, DUTCH, SPANISH, ITALIAN) (AEP)	
	4-642-251-02	PACK, CD ROM	

The components identified by mark ⚠ or dotted line with mark ⚠ are critical for safety. Replace only with part number specified.

Sony Corporation
Information Technology Company

99D0552-1
Printed in Japan © 1999. 4
Published by VAIO Customer Link

9-928-127-31